Tensile Fabric Structures

Design, Analysis, and Construction

PREPARED BY
Task Committee on Tensioned Fabric Structures

EDITED BY
Craig G. Huntington

SPONSORED BY
Structural Engineering Institute of ASCE

Published by the American Society of Civil Engineers

Cataloging-in-Publication Data on file with the Library of Congress.

American Society of Civil Engineers
1801 Alexander Bell Drive
Reston, Virginia, 20191-4400

www.pubs.asce.org

Any statements expressed in these materials are those of the individual authors and do not necessarily represent the views of ASCE, which takes no responsibility for any statement made herein. No reference made in this publication to any specific method, product, process, or service constitutes or implies an endorsement, recommendation, or warranty thereof by ASCE. The materials are for general information only and do not represent a standard of ASCE, nor are they intended as a reference in purchase specifications, contracts, regulations, statutes, or any other legal document. ASCE makes no representation or warranty of any kind, whether express or implied, concerning the accuracy, completeness, suitability, or utility of any information, apparatus, product, or process discussed in this publication, and assumes no liability therefore. This information should not be used without first securing competent advice with respect to its suitability for any general or specific application. Anyone utilizing this information assumes all liability arising from such use, including but not limited to infringement of any patent or patents.

ASCE and American Society of Civil Engineers—Registered in U.S. Patent and Trademark Office.

Photocopies and permissions. Permission to photocopy or reproduce material from ASCE publications can be obtained by sending an e-mail to permissions@asce.org or by locating a title in ASCE's online database (http://cedb.asce.org) and using the "Permission to Reuse" link. *Bulk reprints.* Information regarding reprints of 100 or more copies is available at http://www.asce.org/reprints.

Copyright © 2013 by the American Society of Civil Engineers.
All Rights Reserved.
ISBN 978-0-7844-1289-3 (paper)
ISBN 978-0-7844-7792-2 (ebook)
Manufactured in the United States of America.

Front Cover
Stanford University Aquatic Center
Architect: ELS Architecture & Urban Design
Fabric Canopy Design & Engineering: Huntington Design Associates

Back Cover
Hampton Roads Convention Center Porte Cochere
Architect: HOK
Fabric Structure Design & Engineering: FTL Design Engineering Studio

Preface

Tensile membrane structures are part of a unique technology that gives designers, architects and engineers the ability to experiment with form and create exciting solutions to conventional design problems. These structures are not only visually exciting, but are environmentally sensitive and economically competitive as well. Membrane translucency provides more light than most indoor activities require and creates an attractive "glow at night.” The state-of-the art materials, typically PTFE-coated fiberglass and vinyl-coated polyesters, are inherently waterproof and require very little maintenance. Because the materials are lightweight, these structures are extremely efficient in long span applications and are often constructed with substantial savings in the foundation and supporting structure costs. As an added bonus, they do more than just transmit forces to the ground. They serve as the primary architectural form determinant and provide much of the building envelope.

Conventional structures rely on internal rigidity (stiffness) to achieve stability and to carry loads. Fabric structures constructed of elements that have little or no bending or shear stiffness (cables and membranes) must rely on their form and internal tensile forces to carry loads. What makes these structures more complicated to design than their conventional counterparts is that they tend to be highly non-linear in their behavior and their shape is not known when the design begins. The non-linearity is a result of significant changes in geometry that usually occur under load, even though the materials remain, more or less, linearly elastic after the initial set. This change in geometry is a desirable quality, since if properly designed, tensioned fabric structures will increase their capacity to carry load as they deform. In fact, these structures are capable of maintaining a very high ratio of applied loads to self-weight, in contrast to steel or concrete structures of the same spans.

In the last 20 years, great advances have been made in this field. Today we have very sophisticated software for the analysis and design of membrane structures. Not too long ago most computer programs involved with these structures were generated by companies that were very reluctant to share or sell them. At the time of this writing, software that varies in price, capability, and ease of use is available from more than a dozen sources.

This publication describes the materials, design, and behavior of tensioned fabric structures. Chapter 1 reviews the history of the technology. Chapter 2 describes the overall design and construction process and discusses the role of each participant in the project from inception through completion. Chapter 3 treats the properties of various fabrics and films. In Chapter 4 types of loads and their effects are discussed.

The design of a tensile membrane structure can be separated into two distinct phases: shape determination (sometimes called form-finding) and analysis under different loads. Shape determination requires the "design" of a structure whose form is not known in advance; changes in internal pre-stress will change the shape of the overall structure. Analysis of the system requires the solution of equations for the deformed configuration, a shape that is also unknown in advance. If the stresses in the elements are too high or if the deformations are greater than acceptable, the designer is free to change the shape of the structure by revising the pre-stress or by modifying the boundary conditions. These subjects are discussed in Chapters 5 and 6.

Once the structure is designed, the final steps to its completion are fabrication and erection. Chapter 7 describes the connections between the various materials and the attachments to the supporting structure. In Chapter 8, the non-structural issues unique to tensile membrane structures are presented. Patterning, the process of selecting an arrangement of two-dimensional panels to develop the three-dimensional surface, is discussed in Chapter 9. Finally, the erection of the structure, which requires careful handling of the materials as well as knowledge of the behavior of the structure, is also treated in Chapter 9.

In conclusion, it should be emphasized that this document does not purport to be a comprehensive treatment of the subject. Instead, the purpose of this publication is to assist design professionals and builders in understanding the basic design principles, materials, fabrication methods, and erection procedures utilized with these structures. Experienced designers are presented with ideas that may help them further understand their craft and hone their skills. Novices are offered a wide range of introductory information to assist them in entering the exciting field of tensile membrane structures. Perhaps with both the expert and the beginner, we can inspire the creation of more of these wonderful structures.

The Authors are members of the Tensioned Fabric Structures Task Committee of the Special Structures Committee of the Committee on Metals, 2010.

Contents

Preface..v
Acknowledgements vii

Chapter 1 History and Development of Fabric Structures 1

Chapter 2 The Design and Construction Process..25

Chapter 3 The Material Characteristics of Fabrics...32

Chapter 4 Loads...51

Chapter 5 Form Determination...56

Chapter 6 Load Analysis 94

Chapter 7 Connections 104

Chapter 8 Non-Structural Performance Considerations 126

Chapter 9 Fabrication and Construction 138

Appendix 1 Glossary of Terms...151

Appendix 2 Wind-Tunnel Studies of Tensioned Membrane Structures............159

Bibliography 165

Index 173

Chapter 1
History and Development of Fabric Structures

1.1 Traditional Tent Forms

The tent has been the dwelling in one form or another for most nomadic peoples from the Ice Age to the present. Vegetation permitting, the most common supports for tents were tree branches or the trunks of saplings. The heavier of these were sometimes left behind because of transportation problems. The skin or velum of early tents used animal hides or, less frequently, birch bark pieces or latticed leaf fronds. Later, these were replaced by woven materials such as wool or canvas. Contemporary materials include aluminum, fiberglass, and steel for the supporting elements and highly sophisticated synthetic fabrics for the velum.

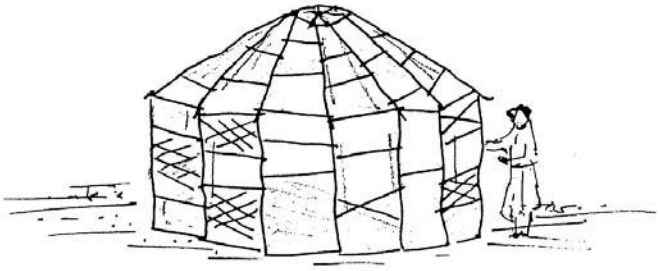

Figure 1-1
Kibitka
(Sketch by the author)

Until quite recently most tents consisted of three basic forms: the conical or tepee shape, the widespread kibitka or yurt that has cylindrical walls and a conical or domical roof as shown in Figure 1-1, and the "black" tent that has the velum tensioned into saddle shapes as shown in Figure 1-2. The black tent gets its name from the goat hair used to weave the velum. (The gable-roofed, ridge-type tent saw little use in ancient times but became a popular and durable military form beginning in the 18th century. It could be considered as an adaptation of the kibitka form to a rectangular plan.)

Of the three basic forms, the conical tepee form is the oldest and saw widespread use across northern Europe, northern Asia, and North America. The conical kibitka shape was prevalent as far back as 2000 B.C., and even now it is used more than any other dwelling form in the world. The same shape executed in vines and straw is found throughout Africa and South America. This tent form developed in a wide band from the eastern Mediterranean region to Mongolia. Its shape has been the one most copied or adapted for later tents. For example, a parasol roof shape derived from the kibitka was used in the military tents of eastern European countries in the 18th Century and before.

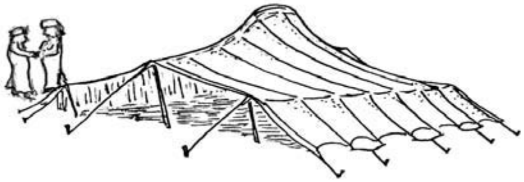

Figure 1-2
“Black” Tent
(Sketch by the author)

The "black” tent is probably about as old as the kibitka form and, like it, is still much used today. The loosely woven cloth permits the passage of air yet provides a high degree of shade, appropriate for its use in hot arid climates. It developed in Asia from Iran and Afghanistan and later spread to northern Africa.

One can easily contrast the black tent of the warmer arid regions and the tepee shape of the northern climates. The steeply sloped sides of the latter form do not easily collect snow and provide a natural chimney for the necessary fire within. The low profile and shallow slopes of the black tent make it resistant to the desert winds.

Of the three basic shapes, the black tent is the only one in which the form is not completely determined by its supporting framework. In the first two, the velum serves only as a barrier to the elements and is not an integral part of the structural system. In the black tent, however, the amount of tension (or prestress) in the velum establishes its scalloped form and provides stability for the supporting elements. In this manner and because of its basic anticlastic surface, it is highly related, from a structural standpoint, to contemporary tensioned fabric structures.

Another structurally interesting tent form is the "envalet," popular in Spain for several decades after 1900. These tents had a clear span of about 30 meters and were erected annually for village festivals. Tall wood poles were placed around the perimeter of the roof and ropes were suspended across the rectangular plan so that the fabric could be suspended from above (Figure 1-3).

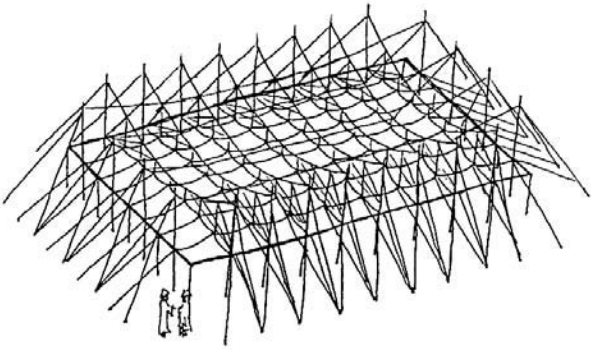

Figure 1-3
“Envalet” Tent
(Sketch by the author)

One of the largest tents ever constructed was the one used in 1925 for the National Congress of India led by Mahatma Gandhi. It provided shade for thousands of delegates and visitors. Wooden poles were used to support the hand-woven membrane.

The largest wall tents were the traveling circus "big tops" popular in the U.S. from the early 19th Century. Harnessed elephants were often used to pull the supporting poles into place as the tents were set up and taken down many times in the course of a single season. In the 1950s, these reached their maximum size, covering more than one hectare. Shortly thereafter, circuses abandoned the tents as more cities were able to provide a rigid-roofed civic center or coliseum.

1.2 Air Structures

The air-supported roof provides an economical way to achieve long spans. Such structures were first proposed in 1917 by William Lanchester of England for use as field hospitals. He received a patent but never constructed one. In 1946 Walter Bird pioneered the radome; the first one was constructed of neoprene-coated fiberglass with a diameter of 15 meters (Figure 1-4). By the 1960s his Birdair Company was building them with spans of more than 60 meters using a laminated DACRON fabric with a HYPALON coating.

In 1958 Walter Bird constructed the McBac Arts Center Theatre in Boston. Designed by architect Carl Koch and engineered by Weidlinger Associates, it was intended to be erected each summer. The roof consisted of an air-inflated, lens-shaped "pillow" supported by a steel compression ring. (The Birdair Company later grew to construct most of the large fabric structures in the United States in the latter half of the 20th Century.)

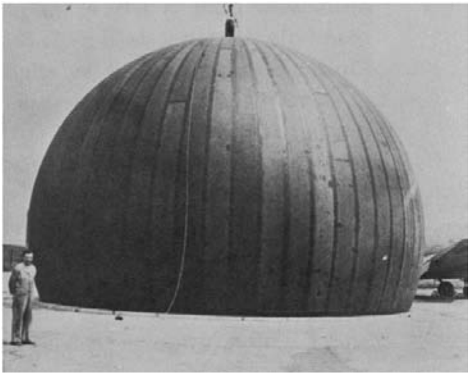

Figure 1-4
Walter Bird on top of the first radome near Buffalo, NY in 1946
(Photograph with permission from Milt Punnett)

The 1970 World's Fair site in Osaka, Japan provided the impetus for rapid developments in fabric structures. The poor soil conditions and the threat of seismic shaking both suggested the use of lightweight structures. From a structural standpoint, the most significant building at the Fair was the U.S. Pavilion designed by the architecture firm of Davis and Brody and engineer David Geiger of the Geiger-Berger firm (Figure 1-5). The low-profile, cable-restrained, air-supported structure was made of vinyl-coated fiberglass spanning to an oval-shaped concrete compression ring. It provided 10 800 square meters of column-free exhibit space. By using a super-ellipse for the ring and a diagonal cable pattern, Geiger was able to greatly reduce the bending forces in the ring. This simple, innovative structure was actually the result of major budget cutbacks that had sacked two previous designs by the architects.

Figure 1-5
U.S. Pavilion, Osaka World Fair, Japan, 1970
(Photograph courtesy of Geiger Engineers)

About this time, Harold Gores of the Educational Facilities Laboratory (EFL), an arm of the Ford Foundation, was looking for ways to provide temporary college athletic facilities to accommodate the arriving baby boomers. The search was on for a fabric for use in air-supported roofs that was very strong but resistant to both fire and ultraviolet deterioration. A team of John Effenberger (DuPont), Malcolm Crowder (Owens-Corning), John Cook (Chemical Fabrics Corp.), and David Geiger proposed using fiberglass coated with polytetrafluoroethylene (PTFE), better known as TEFLON, a product developed by DuPont. (All of the large, air-supported roofs and almost all of the larger tensioned fabric roofs have been constructed of this material.) This material was originally developed by NASA for space suits. Hal Gores convinced the presidents of two private colleges to gamble on the new structural system. The Steve Lacy Field House at Milligan College in Tennessee was constructed in 1972-75. It was a cable-restrained, insulated roof with a diameter of 65 meters. The Thomas H. Leavey Activities Center at Santa Clara College in California was completed in 1973 and consisted of two oval-shaped structures, the larger being 91 x 59 meters in plan. From the outset, the Milligan roof encountered inflation difficulties and was replaced by a rigid steel frame in 1986.

In 1975 the Silverdome at Pontiac, Michigan was completed, measuring 220 x 159 meters and providing a clear span exceeding those of the Astrodome and the Superdome in Houston and New Orleans, respectively. Smaller college-facility domes were constructed in the next few years: UNIDome at the University of Northern Iowa (1976), Dakota Dome at the University of South Dakota (1979), O'Connell Center at the University of Florida, and the Sundome at the University of South Florida (both 1980). Following Pontiac, five more of the large domes were built: Carrier Dome at Syracuse University (1980); Metrodome in Minneapolis (1982); B. C. Place, Vancouver, Canada (1983); Hoosier Dome in Indianapolis; and Tokyo Dome (1988). Almost all of these were engineered by David Geiger and built by Birdair. (Note: These large structures are often renamed as they change sponsoring companies.)

Many of these air-supported facilities have proven to be difficult to maintain under bad weather conditions. In some cases the hot-air snowmelt systems were inadequate, and in other cases the air-pressure control systems were not sophisticated enough. Most of them have suffered from accidental deflation, some more than once, with the attendant plethora of law suits. (The lawsuits involved material damage and not personal injuries. In the interest of fairness, it is also to be noted that many of the more recent traditional stadium structures have also suffered lawsuits.) Perhaps the most spectacular failure occurred when the fabric of the Silverdome was almost completely destroyed by high winds and heavy wet snow in 1985 when a large piece of metal siding was torn from the exterior wall. Most of the smaller of these air-supported roofs (found on college campuses) have been replaced with rigid metal roofs. Usually this has been because these roofs were not designed for heavy point loads such as those generated by the huge speakers needed for rock concerts. Several of the larger ones have also replaced the fabric with rigid and/or retractable roofs. Still, an air-supported roof remains the most economical way to cover large clear span spaces and there will always be a market because of that.

With the advent of the cable dome and movable roofs (both of which are discussed later in this chapter), it is unlikely that many more of these large, air-supported roofs will be built. While these giant air structures are headaches for the owners and operators, the fans love them! They have become symbols of pride for most of the cities in which they have been constructed.

1.3 Cable Nets

The forerunners of contemporary tensioned fabric structures were cable net structures. Perhaps the most influential is the first one, the J.S. Dorton Arena (formerly known as the Live Stock Judging Pavilion) in Raleigh, North Carolina designed in 1951 by architect Matthew Nowicki and engineer Fred Severud. This is the structure Frei Otto says had a significant impact on him when he visited Severud's office in New York City as a student. Other early cable roofs include Eero Saarinen's Yale University Hockey Rink, again engineered by Severud (1957); the French Pavilion at the Brussels World's Fair, designed by Rene Sarger (1958); and the Sydney Myer Music Bowl in Australia, designed by architect Robin Boyd and engineer Bill Irwin (1958). One of the most elegant cable nets was the one designed for the EXPO ’67 in Montreal, Canada by the German architects, Frei Otto and Rudolph Gotbrod (Figure 1-6). It had fabric suspended from the net. This structure provided the impetus for the huge cable net roof for the 1972 Olympic Stadium in Munich. It is roughly ten times larger than the Montreal roof and had many designers. The architect Gunter Behnisch and the engineer Fritz Leonhardt (who at first opposed the project) played key roles. Heinz Isler, the well-known concrete shell builder, and Frei Otto were also involved; the project engineer was Jorg Schlaich, then with the Leonhardt firm. (On the same Olympic site is the Swim Hall roof, believed to be the first cable net designed using a computer. The analysis was done by Professors Klaus Linkwitz and John Argyris of the University of Stuttgart.)

Figure 1-6
German Pavilion, EXPO '67, Montreal, Canada, 1967
(Photograph by the author)

Frei Otto was also a consultant with Gotbrud on the King Abdul Aziz University Sports Hall, engineered by the British firm Buro Happold in 1979. There is little doubt that Otto had considerable influence as a pioneer in the development of tensile structures.

1.4 Tensioned Fabric Structures

The modern tensioned fabric era began with a small bandstand designed and built in 1955 by Frei Otto for the federal Garden Exhibition in Kassel, Germany. He built several more complicated canopies for various exhibitions, including the entrance pavilion and a dance pavilion at the Cologne Federal Garden Exhibition in 1958. Because he lacked a fabric of sufficient strength, these canopies were limited in span to about 25 meters or fewer.

With the advent of PTFE-coated fiberglass, architect John Shaver of Salina, Kansas was able to convince the president of LaVerne College in California to construct the new Student Activities Center and Drama Lab using a mast-supported, tensioned-fabric roof (Figure 1-7). Unfortunately, the translucency of the fabric could not be used to advantage because, at that time, the local building code required an overly conservative burn-through test, and an opaque insulating liner had to be added to the underside of the roof in order to pass this test. Nevertheless, the "Supertents," as the complex is called, is a favorite with the students. This landmark building reached its 37th birthday at the time of this writing, and the fabric is still in excellent shape.

Figure 1-7
La Verne College Student Activities Center, California, 1973
(Photograph by the author)

From 1968 to 1983, Horst Berger and David Geiger were partners. Geiger worked mostly on air-supported structures and Berger with tensioned fabric membranes. In 1976 Horst Berger, working with the architecture firm of H2L2, designed two significant fabric structures for the bicentennial celebration in Philadelphia. The Folklife Pavilion spanned 21 meters using fourteen 17-meter-tall vertical masts in two parallel rows. The Independence Mall Pavilion was the larger one, covering over 4000 square meters using eight tilted mats in two rows for a clear span of approximately 35 meters. It was one of the largest tensioned fabric spans in the world at the time it was constructed. Both of these structures used polyvinylchloride (PVC) as a coating over polyester fabric. They were the first of many successful Berger designs using a ridge-and-valley geometry.

The gigantic Haj Terminal Building at Jeddah, Saudi Arabia is used to provide shade for the hundreds of thousands of pilgrims who make the journey to Mecca each year (Figure 1.8). The Geiger Berger firm was indirectly a consultant to the architect-engineer firm of Skidmore-Owings-Merrill and Horst Berger served as the partner-in-charge. The structure consists of 210 identical cone-shaped canopies square in plan, each measuring 45 meters on a side. It covers approximately 47 hectares, was completed in 1981, and is still the world's largest fabric roof.

Figure 1-8
The Haj Terminal under construction, Jeddah, Saudi Arabia, 1981
(Photograph courtesy of Birdair, Inc.)

The firm, with Berger taking the lead role, acted as the structural engineer or as a design consultant for several noteworthy pavilions including: Queeney Park skating and tennis canopy in St. Louis, Missouri (1978); new Florida Festival structure at Sea World, in Orlando, Florida (1980); Tennessee State Amphitheater at the World's Fair in Knoxville (1982); and the Crown Center Ice Rink and Performing Arts Center in Kansas City, Missouri (1983). All but the Sea World building had exterior masts using trussed tubes to provide column-free space on the interior. With architect L. Gene Zellmer, Berger designed the Bullocks Fashion Island department store in San Mateo, California in 1981. The innovative frame had eight masts and cantilevered edges. In that same year, Zellmer designed the single-masted Good Shepherd Lutheran Church in Fresno, California.

In 1983 the Geiger-Berger firm collaborated with the Chandler/Kennedy Group to design the unique Lindsay Park Aquatic Center in Calgary, Canada. David Geiger was the engineer-of-record and two of his engineers, David Campbell and Kris Hamilton, were heavily involved. It has a 128-meter trussed arch that acts as a central spine to support fabric and cables. The recreational facility is well insulated (Class R16) but is still highly translucent.

In 1985 the firm worked with architects Ian Fraser and John Roberts to create the huge King Fahd International Stadium in Riyadh, Saudi Arabia (Figure 1-9). Horst Berger was the partner-in-charge. The roof has a diameter of 288 meters and consists of 24 identical cantilevered modules. In keeping with international regulations regarding natural turf, the center is open. Pictures make the stadium appear deceptively small, even though its central opening covers one-third more area than the Pontiac Silverdome. The two-meter-diameter masts are almost 60 meters tall.

Figure 1-9
Riyadh Stadium, Saudi Arabia, 1985
(Photograph courtesy of Birdair, Inc.)

For EXPO '86 in Vancouver, Horst Berger served as a consultant to the Zeidler/Roberts Partnership, architects of Canada Place, an exhibition building on the city's harbor waterfront. David Geiger was the partner-in-charge and the engineer-of-record. The roof structure covers an area 135 meters x 55 meters and consists of five modules in ridge-and-valley pattern with two rows of five masts. The structure is unique in that the five modules are skewed significantly with respect to the building's long dimension. This was done to reduce the span the fabric had to accommodate from ridge to ridge. The building houses a convention center, a cruise ship terminal, a hotel, and an IMAX theater and has become a landmark for the city.

In 1989 Berger designed an elegant canopy for the roof deck of Arthur Erikson's new San Diego Convention Center. Spanning almost 100 meters, it provides shade and rain protection for special exhibits, concerts, and banquets. It consists of five ridge-and-valley modules each having a pair of flying struts, i.e., vertical masts that do not deliver their loads to the base level but are suspended in the air by cables. Running down the middle of the span is a unique "fly" system that covers openings in the main roof and accentuates the sail-like nature of the structure.

In 1990 Horst Berger, now having his own firm, designed the Cynthia Woods Mitchell Performing Arts Center in Woodlands, Texas outside of Houston. The roof covered 3000 seats and the stage and provided a focal backdrop for a possible 7000 more people on the amphitheater lawn. In 2008, Hurricane Ike with winds exceeding 230 km/h destroyed much of the original fabric. The roof structure was rebuilt in 2009 by FabricTec Structures employing Horst Berger and DeNardis Engineering as design consultants (Figure 1-10). The original scheme was maintained using the same unique cantilevered strut system to avoid columns at the periphery. The roof was also doubled in size now covering more than 6000 seats.

Figure 1-10
Cynthia Woods Mitchell Amphitheater, Woodlands, Texas, 2009
(Permission from Jeff Young, Vice President of Operations, The Cynthia Woods Mitchell Pavilion)

Also in 1990, the Chene Park Amphitheater (Figure 1-11) was constructed on the Detroit riverfront. The fabric roof, designed by architect Kent Hubbell and engineer Bob Darvas, provides shelter for 6000 seats and uses three masts, each topped by a fan-shaped, trussed arch. The roof itself approximates a quarter-circle in plan with a large space truss truncating the narrow end above the stage.

Figure 1-11
Chene Park Amphitheater, Detroit, Michigan, 1990
(Photograph courtesy of Birdair, Inc.)

For the 1990 Olympics, the Italian National Olympic Committee completely rebuilt their stadium to give it a capacity of 85 000 seats. The elliptical roof in the form of a ring covers all but the playing field, left uncovered as per Olympic rules. The fabric-covered steel frame cantilevers 45 meters toward the center from the outer ring, which is 314 x 220 meters in plan. The huge (yet light in appearance) roof is supported on 80 rows of reinforced concrete columns located under the outer ring to provide clear sight lines for all seats. The architecture firm was Italproggeti, and the engineer was Massimo Majowieki.

Also in 1990, the architect Yatsui and the engineer Mamoru Kawaguchi collaborated to design the unusual roof of the Para Disso Amusement Park in Osaka, Japan. The arched roof is suspended from two rows of seven inboard masts that pierce the roof. Each mast picks up the steel roof arches at six locations in a manner reminiscent of the Spanish envalet tents. Cable-restrained fabric spans approximately 20 meters from arch to arch in anticlastic form. The building contains several swimming pools, a giant water slide, and large indoor beach.

In 1991 Nic Goldsmith of FTL Associates in New York City designed the Carlos Mosley Music Pavilion (Figure 1-12). This portable orchestra shell covers more than 300 square meters and arrives at the site on seven trucks, five of which provide support for the structure. The hydraulically operated external masts enable the structure to be erected without cranes in under four hours and dismantled in less time with a crew of 11. In its first summer, the structure served 30 performances in 16 park locations throughout New York City.

Figure 1-12
Mosley portable music pavilion, New York, New York, 1991
(Permission from Nic Goldsmith, Senior Principal, FTL Design Engineering Studio)

In 1992 the new Pier Six Concert Pavilion (Figure 1-13) in Baltimore Inner Harbor was completed. This superbly detailed structure was designed by Todd Dalland, also of FTL, and provides seating for 3400 concertgoers. At the stage end, the fabric attaches to a curved concrete beam and makes a unique transition to the metal roof of a masonry building. The curvilinear structure provides a welcome contrast to the mostly geometric, angular forms of the other buildings of the harbor.

Figure 1-13
Pier Six Concert Pavilion, Baltimore, Maryland, 1992
(Permission from Nic Goldsmith, Senior Principal, FTL Design Engineering Studio)

At the end of 1993, the Great Hall of the Denver Airport was completed (Figure 1-14). The fabric roof covers approximately 14 hectares including the enclosed landside terminal, which is 300 x 70 meters in plan. The architectural firm of Fentress and Bradburn selected Horst Berger with Severud Associates to create the roof structure. The roof membrane consists of two layers of PTFE-coated fiberglass located two-to-three meters apart. The inner layer provides thermal insulation and acoustic absorbency.

Figure 1-14
Denver Airport, Colorado, 1993
(Photograph courtesy of Birdair, Inc.)

The vertical enclosure consists of a glass curtain wall cantilevered upward from the main floor by a system of cables and struts, in some cases as much as 18 meters. The closure system between the glass walls (having relatively limited deformation capability) and the fabric roof (needing to sustain large deformations under wind and snow loading) uses a continuous inflated tube, more than a meter in diameter as the movement connector.

1.5 Cable Domes

A newer technology for long-span roofs is found in the fabric-covered cable dome, a structural system based on Buckminster Fuller's tensegrity dome developed in the 1950s. The basic scheme is circular in plan using radial trusses made of cables except for vertical compression struts. Circular hoops take the bottom chord forces as shown in Figure 1-15.

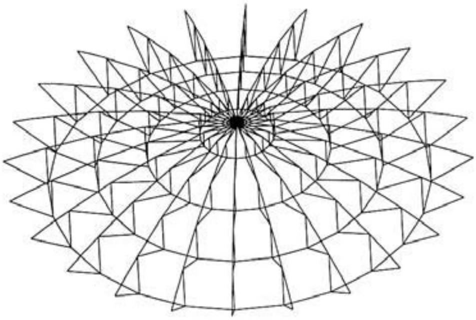

Figure 1-15
Cable dome schematic
(Sketch by the author)

The Fuller Dome developed instability under unsymmetrical loading conditions, and this problem prevented any practical use until it was overcome by design changes introduced by David Geiger. Andrew Stefaniuk, David Chen and Paul Gossen (all of Geiger's office) also contributed. The first successful cable domes were constructed in Seoul, Korea for the 1986 Asian Games and later used for the 1988 Olympics. The Gymnastics Arena was 120 meters in diameter and the Fencing Arena, 90 meters.

The first cable dome in the United States was the Redbird Arena on the campus of Illinois State University. It was designed by Paul Kennon, architect, and David Geiger. David Campbell of the Geiger firm was the engineer. It is elliptical, 90 x 77 meters in plan, and heavily insulated between the outer structural fabric and inner fabric liner. Completed in 1989 it has an unusual design feature in that it has only one tension hoop between the inner tension ring and the perimeter compression ring. This visually emphasizes the peaks created by the vertical struts and gives the roof a more crown-like appearance. (Personal communication with David Campbell, July 9, 1990)

In 1990 the Suncoast Dome was completed in St. Petersburg, Florida. The stadium was designed by HOK, Architects and the roof was engineered by the Geiger firm. It is the first cable dome designed for baseball, and the 210-meter-diameter roof is tilted six degrees to provide more seating behind home plate and the infield area. The structure uses four hoops to support the fiberglass fabric and its acoustic liner.

The largest cable dome to date is the Georgia Dome (Figure 1-16) in Atlanta, completed in 1992. Designed for football, it has an oval plan, 235 x 186 meters, with a 56-meter-long truss running down the middle. The design of the roof was accomplished by the engineer Matthys Levy of Weidlinger Associates.

Figure 1-16
Georgia Dome, Atlanta, Georgia, 1992
(Photograph with permission from Matthys Levy, Chairman Emeritus, Weidlinger Associates, Inc.)

It has three elliptical hoops between the truss and the compression ring. It is different from previous cable domes in that the ridge cables of each radial "truss" do not lie in the same plane but form triangles with the vertical strut system. This results in a diamond pattern of hyperbolic paraboloids for the fabric roof panels.

Today, cable domes have lost their popularity for two reasons. First, the rigid steel roof has proven to be more economical. Second, the owners of contemporary sports venues often desire a roof that can open and close to accommodate different weather conditions.

1.6 Recent Tensioned Fabric Structures

In 1998 the architecture firm of Altoon and Porter designed an iconic rooftop structure for the Kaleidoscope Shopping Center in Mission Viejo, California. (See Figure 1-17.) It was engineered by Huntington Design Associates of Oakland, California and has eight woven panels of PVC-coated polyester. The structure is supported by tubular steel members that provide attachment points for the catenary edge cables as well the tension ring at the base of the panels.

Figure 1-17
Rooftop structures for the Kaleidoscope Shopping Center,
Mission Viejo, California, 1998
(Photograph with permission from Craig Huntington, President, Huntington Design Associates)

The Paulinia Sports Arena in Paulinia, Brazil was constructed in 1999. The designer was Antonio Carlos Negras, and the fabric is PVC/ polyester. It is a circular structure supported by 12 exterior masts 17 m tall, and the clear span is almost 40 m. The mast configuration is unique in that the masts slope slightly inward toward the center of the structure, rather than outward.

The Arabian Tower (Burj Al Arab) Hotel in Dubai, completed in 2000, is the world's tallest building at 321 meters to use a fabric cladding. As shown in Figure 1-18, the structure has a unique application of PTFE/glass fabric designed to resemble the billowing sail of an Arabian dhow. The double-layered membrane serves as a sun shade for the huge atrium. The overall designer was WS Atkins of the United Kingdom, and Skyspan out of Rimsting, Germany fabricated the membrane. A complicated aluminum framework is supported by 12 horizontal steel ribs spaced 14 meters apart.

Figure 1-18
Arabian Tower Hotel, Dubai, United Arab Emirates, 2000
(Photograph with permission from Maqsood Ahmed, Principal Engineer, Specialty Structures, Affan Innovative Structures)

Also in 2001, the Seoul World Cup Stadium was designed as one of the venues for the 2002 World Cup soccer games. The architect was the Beyond Space Group in Seoul, and the fabric-and-glass roof was engineered by Geiger Engineers of Suffolk, New York. The majority of the roof membrane uses PTFE/fiberglass, but glass was used for portions of the roof to permit enough sunlight for the grass to grow. (Natural turf is a requirement for Cup matches.) This means that the entire 44 000-square-meter roof is either translucent or transparent. The canopy is a unique spatial network of truss elements suspended from 16 masts as shown in Figure 1-19 (David Campbell, Geiger Engineers, personal communication, July 18, 2002).

Figure 1-19
Seoul World Cup Stadium, Seoul, Korea, 2001
(Photograph courtesy of Geiger Engineers)

Nicholas Grimshaw was the architect for the Eden Project in Cornwall, England. It is a huge botanical garden covering more than 15 hectares with five geodesic domes. As shown in Figure 1-20, the envelope consists of large "pillows" that are highly transparent so that sufficient light is provided for the 5000 species of plants. The material, ethylene-tetrafluoroethylene (ETFE), is actually a type of foil and was selected over glass because of its extraordinarily low weight. Anthony Hunt and the Arup firm were the consulting engineers and the roof contractor was MERO of Germany. The structure was completed in 2001.

Figure 1-20
The Eden Project, Cornwall, England, 2001
(Photograph with permission from Alastair Gardner)

In 2002 a canopy covering the courtyard of the historic Palacio de Mineria in Mexico City was completed. The Palacio itself was finished in 1813. Since it is considered a national monument, many approvals were required before construction could begin. The form is radial with a central skylight as shown in Figure 1-21. The canopy is 35 meters square in plan and is nine meters tall. It is made of PVC/polyester and was designed to be taken down and re-erected as needed. (As of this writing, this feature has not been used.) The architect, Juan Gerardo Oliva-Salinas, on the faculty at the National Autonomous University of Mexico, was the lead designer for the project.

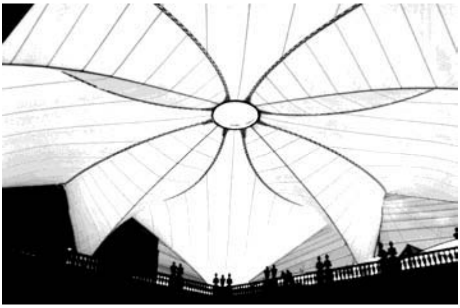

Figure 1-21
Canopy for the courtyard of the Palacio de Mineriain Mexico City, 2002
(Photograph with permission from Master in Architecture Victor Roldan)

The porte cochere on the Hampton Roads Convention Center in Virginia is a 2000 square meter structure of PTFE/glass that serves as the entrance canopy. FTL of New York, NY was involved as a consultant to HSSB (who, in turn, was a consultant to HOK), both generating a new design and doing the engineering. Birdair of Amherst, NY fabricated and installed the membrane, completing the structure (Figure 1-22) in 2005. (Nic Goldsmith, FLT Design Engineering Studio, personal communication, May 12, 2007)

Figure 1-22
. Porte cochere, Hampton Roads Convention Center, Hampton, Virginia, 2005
(Photograph with permission from Nic Goldsmith, Senior Principal, FTL Design Engineering Studio)

The Springs Preserve Visitor Center in Las Vegas, Nevada has displays and events that focus on environmental conservation and sustainability in the desert. Its car park employs photovoltaic elements that provide a significant portion of the energy required for the Center. The PVC/polyester panels provide not only shade for the automobiles but also reflect light back to the underside of the PV elements that have cells on both sides. The fabric panels use cables to develop anticlastic surfaces. Completely flat panels would be more efficient in terms of energy production, but the stresses would be too high under the design wind loading. The membranes and their supporting elements were designed by Huntington Design Associates of Oakland, CA and constructed in 2007. The structure has a total of 39 panels, each 90 square meters in size that are supported by steel beams spanning 20 meters. Figure 1-23 is a view from underneath the structure.

Figure 1-23
Car park for the Springs Preserve Visitors Center, Las Vegas, Nevada, 2007
(Photograph with permission from Craig Huntington, President, Huntington Design Associates)

The National Aquatic Center was built for the water events at the 2008 Beijing Summer Olympics. It is a square box 190 meters on a side and 33 meters tall. (See Figure 1-24.) The façade pattern is unusual, consisting of ETFE air-inflated "pillows." The structural design scheme is based on nested polyhedra having 12 or 14 faces through which the designers cut planar slices. The resulting surface appears as a random frame with tubular steel edge members. Natural daylight is used for the daytime events, and LED lights provide a blue glow at night. Tristam Carfrae with the Sydney office of ARUP was the lead engineer.

Figure 1-24
National Aquatics Center, Beijing, China, 2008
Photograph by Charlie Fong used under a CreativeCommonshiplicense
http://creativecommons.org/license/by-sa/3.0/

Figure 1-25 illustrates a shade structure named “Skysong” that was erected over a plaza in the technology campus of Arizona State University. Engineered by FTL Design Engineering Studio, it covers approximately 5000 square meters. The membrane of PTFE/glass is approximately 80 x 80 meters with a “circular” opening 15 meters in diameter. The architect was Pei, Freed and Partners, and the builder was USA Shade Structures/Fabritec. It was erected in 2009 (Nic Goldsmith, FLT Design Engineering Studio, personal communication, August 22, 2008).

Figure 1-25
Shade Canopy for Arizona State University, Tempe, Arizona, 2009
(Permission from Nic Goldsmith, Senior Principal, FTL Design Engineering Studio)

Section 1.7 Movable and Retractable roofs

A new fabric roof for the Waldstadium sports venue in Frankfort/Main, Germany was completed in 2005. The structure, named Commerzbank Arena after its advertising sponsor, seats 48 000 spectators under a PVC/polyester retractable roof as shown in Figure 1-26. The fabric membrane slides along 44 pairs of radial cables spaced vertically as well as horizontally to develop the required out-of-plane stiffness. When not in use, the fabric is stowed inside a large four-sided video module in the center of the roof. The architect was von Gerkan, Marg und Partner, and the consulting engineer for the roof was Schlaich Bergermann und Partner.

Figure 1-26
Commerzbank Arena, Frankfort/Main, Germany, 2005
(Photograph courtesy of gmp-von Gerkan, Marg und Partner Architects/Image: Heiner Leiska)

In 2006, the Foshan Stadium in Foshan, China was completed. The stadium, built for the 12th Guangdong Province Sports Meeting, has a diameter of 330 meters and seats 40 000 spectators (Figure 1-27). At the time of this writing it has the world's largest retractable roof, enabling the playing field to be completely covered in a few minutes. The structures use a combination of PTFE/glass and PVC/polyester membranes. The architect was gmp international GmbH and the engineer was Schlaich Bergermann und Partner.

Figure 1-27
Foshan Stadium, Sports Park, Foshan, China, 2001
(Photograph with permission from Christian Gahl, Architekfurfotograf)

Also in 2006 the courtyard of a medieval castle in Kufstein, Austria was covered by a retractable membrane made of PTFE-coated PTFE fabric known as TENARA, produced by the W.L. Gore company. The space is used for the performing arts including theater and music events. The roof uses cable-stayed radial cables supporting pie-shaped pieces of the fabric. Hydraulically driven trolleys run along the cables to open and close the roof. When the roof is open, the fabric is bundled at the center of the space. When it is closed, the fabric is tightly stretched between the radial cables and catenary cables, forming scalloped edges around the periphery (Figure 1-28). The designers were Kugel and Rein Architects and Engineers.

Figures 1-28
Castle courtyard, Kufstein, Austria, 2006
(Photograph by Andi Schmid, with permission from W.L. Gore and Associates, Inc.)

Section 1.8 Tensioned Fabric in Architectural Art

The artist, Geoffrey Bruce of Tucson, Arizona, designed a kinetic sculpture called *Pirouette* (Figure 1-29) for the campus of Scottsdale Community College. It uses 17 square meters of knitted polyethylene to make a structure approximately four meters square in plan and eight meters tall. The sculpture has an internal ball-bearing mechanism that allows it to spin freely in the wind or by hand. It was installed in 2002 (Geoffrey Bruce, personal communication, November 3, 2008).

Figure 1-29
Kinetic sculpture, Scottsdale, Arizona, 2002
(Photograph with permission from Noah Smith, Design Director, G. H. BRUCE, LLC)

Figure 1-30 shows a canopy designed for the “play theatre” in the Strong Museum of Play in Rochester, New York. It is made of a fabric that is 90% polyester and 10% Lycra and is eight meters in diameter and two meters high. Instead of hiding the structural elements, as is usually required for such projects, the designers chose to let the curved aluminum supporting members project shadows on the membrane. In this case, the shadows reflect a jigsaw puzzle theme. Completed in 2006, the project was designed and installed by Cindy Thompson’s firm, Transformit of Gorham, Maine.

Figure 1-30
Strong Museum of Play, Rochester, New York, 2006
(Photograph with permission from Don Cochran, 2006 copyright Don Cochran Photography)

Chapter 2
The Design and Construction Process

2.1 Organization of the Design and Construction Team

Most buildings constructed in the United States today are designed by a team of engineering specialists working under the direction of an architectural generalist. Their design, once complete, is constructed by a general contractor, usually working with the assistance of specialized subcontractors. The architect and his consultants, often in conjunction with building officials and an owner's testing agency, oversee the work of the contractor to ensure that it is built in accordance with the design.

In some specialized types of construction, the architect or one of his consultants provides only the general parameters and performance standards for a building component, while the detailed design is the responsibility of the subcontractor who builds it. The architect's team must typically review and accept the subcontractor's detailed design prior to construction.

The "design/build" practice described above is common with such routine construction elements as fascia, fire sprinklers, and skylights, but also with less ubiquitous technologies such as tensioned fabric structures. Design/build project delivery responds to the requirements of these specialized construction forms, and the reality that building technology has become so complex and diverse that few architects, even together with their consultants, have detailed knowledge of all the elements that comprise a major building.

Fabric roofs, like concrete shells, are a structural type in which architectural form is defined largely by structure. This characteristic defines the architect/structural engineer relationship, as well, and ultimately determines how engineering functions are contracted. The vast majority of contemporary construction is rectilinear in geometry, and the general proportioning and configuration of structural members are fairly predictable to experienced architects with a modest knowledge of structural design. Since the building's structure is most often clad in some manner and hidden from view, the architect is typically not concerned with the appearance of structural elements or their detailing. These conditions make it possible to delay engineering input for many conventional structures until after the major architectural decisions have been made.

However, the means by which a fabric roof stands up and the way that it looks are inseparable. Supporting masts typically are left exposed, and steel cables pass through space or lay against the fabric so that they remain visible from either above or below the roof. Even the layout of the fabric seams, generally selected to minimize material waste and reflect predominant stress patterns, becomes a strong visual element of the design. Work with fabric requires special skills of both architect and structural engineer, and generally dictates early and close cooperation between them in the design.

The unusual structural properties of the fabrics themselves also have a great impact on the working relationship between the architect and the structural engineer. Due to their minimal thickness, fabrics typically have negligible resistance to either bending or compression. Because of these limitations in load carrying ability, the fabric must be shaped in a precise manner that allows it to carry all applied loads purely in tension. The determination of these shapes is both less commonplace and more complex than determination of the geometry of a conventional concrete or steel frame, and the architect is typically dependent on a structural engineer specializing in fabric structures for assistance in determining the general form of the roof.

Fabric structure contractors fill the need for early specialized engineering input by offering design services that include consulting on design concepts, specifications, material options, and building code issues. Less frequently, the architect or owner retains a structural engineer with specialized knowledge of tensioned fabric structures.

Whatever the arrangement of the design and construction team, it is imperative that a designer or consultant with detailed knowledge of fabric structure behavior be involved at the inception of the project, so that a shape is derived which responds to fabric and cable curvature requirements and provides appropriate behavior under load. Lack of such initial input can lead to designs that are, at best, uneconomical and, at worst, unbuildable.

2.2 Concept Development and Preliminary Design

Concept development and the collaboration between architect and structural engineer on a fabric structure must begin with the establishment of basic architectural parameters that include the following:

1. What area is to be covered?

2. Is the structure to be fully enclosed, or may it be completely or partially open sided?

3. Where will rain or other precipitation be directed?

4. What visual character should the fabric structure have? Is it to be a dramatic focal point, or just a subdued complement to other elements of the design? Should its form reflect that of other elements in the project or of the surrounding neighborhood?

5. What are daylighting and ventilation requirements of the structure?

6. What are the restrictions on location or magnitude of reaction load on the supporting structure or grade? (In many fabric structures, the horizontal reactions are larger than the vertical ones.)

7. Fabric roofs, particularly those with mast support, may be rather tall. Are there building code or other limitations on the height of the structure?

8. What are project fire safety requirements?

9. What is the expected lifetime of the fabric membrane?

10. What is the project budget?

Based on the parameters that are established, the architect and structural engineer may proceed with schematic design. Determination of the overall form of the membrane and its supporting elements cannot proceed without concurrent consideration of its structural feasibility, economy, and elegance. The best form generally results from close, creative, and open minded collaboration during the schematic design phase. The products of the schematic design should include the following:

1. Overall plan and elevation drawings. These views should indicate the approximate geometry of primary workpoints and the configuration and approximate sizes of supporting members.

2. Selection of fabric type (e.g. PTFE or PVC) and color, as required to satisfy project daylighting, fire safety, and durability requirements.

3. Approximate seam layouts and locations of field splices. The seam layout should reflect the visual goals of the design, predominant fabric stresses, and economy of fabric material use. Field splices should reflect erection equipment and logistics, cable layouts, and visual impact.

4. Determination of how the construction and the remainder of the design will be contracted.

5. Definition of loading and applicable codes and standards.

2.3 Contract Documents

Depending on decision made earlier regarding how engineering work is to be contracted, engineering contract documents may be prepared either by the structural engineer contracted by the architect, or by the fabric roof contractor, in the event that the contractor is selected by bid or negotiation prior to the contract document phase. The purpose of the contract document phase work is to delineate the design of the fabric roof in sufficient detail to allow review and approval by the owner and the building official, and to allow construction to proceed.

The work product of the structural engineer during the contract document phase should include the following:

Drawings:

1. Plan, elevation, and overall section views sufficient to show basic workpoint geometry, final member and cable sizes, and membrane material.

2. Structural details for the membrane, including typical seaming and anchorage, as well as general requirements for reinforcement at corners, bearing areas, and areas of high stress.

3. Structural schedules and details for cables, including diameter, approximate length, description of end fittings, construction (e.g. 6 x 19 wire rope), wire grade, and galvanizing requirements. Cable connection details should be provided that include definition of connecting plate geometry, thickness, and edge radii at cable pin attachments.

4. If supporting members of structural steel or other materials are included in the scope of the fabric roof design, these elements should be defined on the drawings with the same standard of care used in more conventional forms of construction. The design and detailing of these members must also reflect the special requirements of fabric structures. These include provision for the large deformations in membranes, cables, and pin connected supporting elements; consideration of the means of erecting the fabric roof; and avoidance of edges or corners to which the membrane might be exposed.

5. If foundation design is included in the scope of work of the fabric roof design, these elements should be defined on the drawings with the same standard of care used in other forms of construction.

Calculations:

1. All but the smallest and simplest of structures will be engineered on the basis of a nonlinear finite element analysis. Methods of analysis are discussed in detail in Chapter 6. The full output of such analysis may be voluminous, and it is generally sufficient to include a summary of analysis input and output in the calculation package submitted with the contract documents.

2. Calculations should include a check of the factor of safety of fabric strip tensile strength in warp and fill/weft directions against calculated membrane stresses under selected load.

3. Calculations for cables should include both determination of cable size and construction to satisfy all loading combinations and the design of attachment plates for bending and axial stress and bearing and tear-out at pin holes for cable termination hardware.

4. Calculations for supporting members and foundations should be provided in accordance with applicable building code requirements and industry standards.

Specifications:

Specifications should be prepared and included with the contract documents, and should be formatted to be included with an overall project specification, where the fabric roof is part of a larger project. Specifications should address fabric and cable material requirements, and the special fabrication and erection requirements of the fabric structure. Requirements for the supporting structure and foundations will generally be provided by reference to other specification sections.

The lack of widespread knowledge of tensioned fabric structures and the limited recognition of this construction type in building codes pose special problems in interfacing with building officials, problems that are shared by other new or esoteric building technologies. While officials are not inherently adverse to the application of such technologies, they may require a high degree of technical validation from the engineer in order to fulfill their obligation to assure public safety and adherence to building codes.

Documentation that is unique to tensioned fabric structures may be required in order to obtain building department approval. This special documentation may include the following:

1. A general description of the characteristics of these structures, including large deflection behavior and anisotropic material properties.

2. Information that is required to understand the methodology of shapefinding and analysis computer programs as well as to read and interpret input and output.

3. Relevant fire testing reports

4. Shapefinding and analysis computer runs.

5. Calculations for cables and steel or other supporting members.

6. Drawings showing the layout of fabric panels, typical fabric seams, interfaces of fabric with the supporting structure, typical cable details, fabric tensioning details, etc.

7. Reference to industry standards, technical papers, committee reports, etc., that document membrane structure design procedures and standards where clear building code provisions are lacking.

Other items generated as part of the design and fabrication process are most often viewed as shop drawing type submittals and not subject to review by the building official. These include computer patterning runs and fabric compensation data (see below), steel fabrication drawings, individual fabric clamp and gasketing details, and similar items.

2.4 Patterning and Detailing

Substantial engineering and detailing must still be completed following the preparation of contract documents. The nature and extent of this work reflects the particular nature of tensioned fabric structures. This includes the use of curving forms without simple mathematical definition, resulting in both irregular connection angles and membrane and cable lengths that must be determined along irregular curves.

As a general rule, patterning and detailing work fall within the purview of the engineer working for the fabric roof contractor. Much like contractor shop drawing and similar submittals on a conventional structure, these documents are typically subject to review by the architect and his consultant, but not by the building official. This work includes the following:

1. Fabric cutting patterns:
   Procedures for creating fabric patterns are discussed in Chapter 9.

2. Fabric details:
   Required details may include cuffs at catenary cables, roped edge terminations; and reinforcement at membrane openings, corners, or other potential areas of high localized stress.

3. Cable lengths:
   Cables, like fabric, are typically manufactured to lengths that are reduced from that of the installed geometry, so that they are prestressed when installation is complete.

4. Steel details:
   Where the fabric structure is supported by structural steel, shop fabrication drawings must be provided, just as they are for conventional structures. Preparation of these shop details is typically dependent on the use of the computer patterns model to determine accurate cable connection angles.

2.5 Fabrication and Erection

The role of the structural engineer during fabrication and erection differs in important details from that in other forms of construction. The engineer's work generally includes the following:

1. Response to contractor requests for information.

2. Consulting on or review of the contractor's erection scheme. The engineer must pay particular attention to stability of supporting members during erection in structures where the supports rely on the fabric membrane or on the cables that are installed together with the membrane. In some larger structures, the engineer must check supporting members and cables for loading conditions that occur only during erection.

3. Minimum construction observation visits by the engineer include those dictated by the building official or by contractual agreement. Inspection of foundations and supporting members will be similar to those performed on more conventional structures. The engineer will generally make at least a qualitative evaluation of cable and membrane prestress by visual inspection and touch. The fabric surface should be walked or, where necessary, inspected from a lift to check for pinholes or tears that occurred during erection. Special attention is required for evidence of damage or overstress at cable cuff terminations, membrane plates, tension rings, and other singularities. Where fabric interfaces with rigid steel elements, the final as-built condition should be reviewed for fabric tears where the fabric comes in contact with the steel under load. This inspection should generally be performed before the erection crew has demobilized, in order to facilitate any required corrections.

2.6 Inspection and Maintenance

On some structures, the fabric roof installer may be contracted to perform one or more inspections following the completion of construction. On structures employing polyester or other material subject to creep strain under prestress, retensioning may be carried out in conjunction with inspection 6 to 12 months after completion. For large structures, a regular inspection and maintenance program should be established with the owner, and is usually carried out by the fabric roof installer, as described in Section 9.3.5.

Chapter 3
The Material Characteristics of Fabrics

3.1 General Characteristics

Tensile membrane structures by nature have large membrane surfaces supported by lightweight cables and rigid supports which make the selection of the membrane a critical choice in the overall design process. Over the past 30 years the technology of coatings and weaving has matured considerably and today architectural fabrics have developed into a few proven options, each having their own attributes and unique characteristics. The following is a brief description of the characteristics of tensile membranes used for architectural fabric structures. The following descriptions of fibers, yarns, weaves, and coatings are the most commonplace in use and consist of over 95% of the architectural market; however other special weaves do exist for unique applications such as extraterrestrial use.

The structural material of a tensile membrane generally is the fabric itself and it is made of woven or laid yarns. In woven fabrics, the yarns pass alternatively over and under each other. This can be done as a single yarn or as paired yarns. With laid fabrics (or stitch bonded fabrics) the yarns are placed on top of each other and joined together by a third diagonal yarn, which is non-structural, but holds the fibers in place. Each method has its own advantages and disadvantages. The yarns are in turn made out of fibers and these fibers become the structural building block of tensile structures. The most commonly used fibers for architectural fabrics are polyester, glass fibers, PTFE (Teflon), and aramids (Kevlar & Vectran), whose properties will be described later. Some membranes are not literally fabrics, but rather use lightweight foil materials as the structural membrane without any fiber reinforcing, such as the ETFE (Ethylene tetrafluoroethylene) foil cushions.

The fibers themselves are in general not long enough or thick enough to be used as a structural material hence they are combined in various ways to make a yarn. The fibers in the yarn may be roughly parallel to each other or twisted together. When they are not twisted, the extensional stiffness of the yarns will be approximately the same as that of a single fiber, but when they are twisted, the elongation under load will be larger. Twisting also increases the ability of the yarns to bend and thus create more flexible woven fabrics.

Once the yarns are made, they are combined in various ways to make the fabric. The yarns may be woven together or simply laid on top of each other. The most commonly used weave is the plain weave where individual threads perpendicular to one another alternatively pass over and under each other. The panama weave is similar except that pairs of two threads pass under and over. The woven weaves can either be tight so that the yarns touch each other or they may be loosely woven so that there are large spaces between adjacent yarns. If the weave is tight, a cloth is formed and if they are loosely woven, a shade net or mesh material is formed.

This shade net offers greater transparency and translucency depending on the percentage of shade required as shown in Figure 3-1.

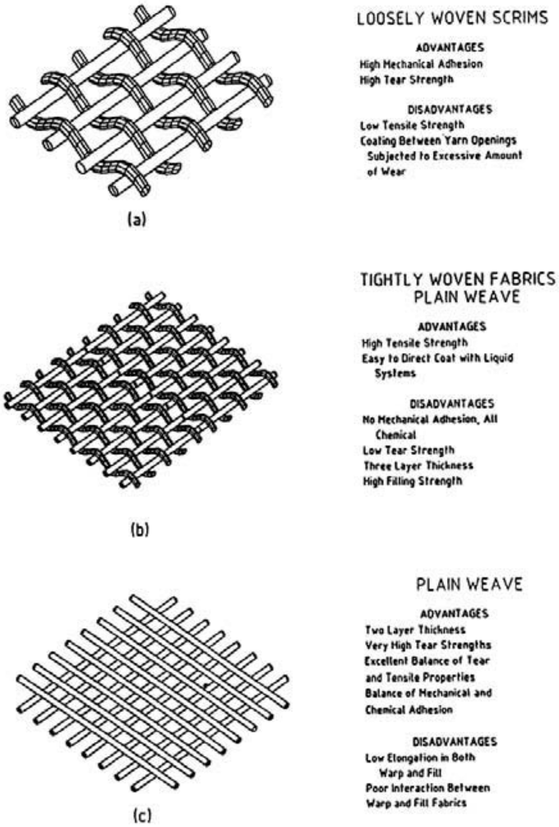

Figure 3-1 (a, b, c)
Examples of mesh and solid fabrics

The plain or panama weaves have long straight yarns called warp yarns which are stretched tightly during the weaving process. The perpendicular yarns are called fill or weft yarns which are interwoven at right angles, alternately over and under the warp yarns. In laid cloths, the yarns are simply placed on top of each other usually at right angles and joined together by stitch bonding or weft insertion threads.

Generally, the plain weave has the greatest angle deformation characteristics (the allowance of perpendicular fibers to rotate into non perpendicular positions under tension) of the two threads in building applications, with the panama next and the stitch bonding process being the stiffest. However coatings play a major role in the stiffness characteristics also and these will be discussed later in the coatings section.

A typical plain weave is shown in Figure 3-2. The weaving causes a different behavior of the warp and fill yarns under load. The approximately straight warp yarns simply stretch under load whereas the bent fill yarns flatten where they cross the warp yarns. There is also a small amount of bending of the warp yarns by the tension force of the fill. Understanding this characteristic helps in the tensioning of frame structures where pulling on the warp yarns shorten or prestress the fill yarns.

These geometrical distortions cause an orthotropic behavior (one that has different material properties or strengths in different orthogonal directions) of the fabric with the application of load. To overcome this perceived drawback, some fabrics have the yarns pre-stressed before the coating process by stretching them with a series of pins on the edges of the rolls. This results in both yarns being crimped around each other so the behavior of the fabric is more nearly equal in both directions. Whichever way the fabric is made, generally the cross sectional area of the warp and fill fibers per fixed length will not be the same. Most fabrics have greater strength in the warp direction than in the fill direction, which also contributes to the orthotropic behavior of the fabric. In addition the twist of the yarns and the tightness of this twist affects the behavior. This is why it is essential in design of fabric structures to have biaxial testing done on each roll of fabric to fully understand its behavior.

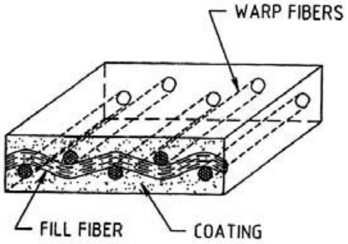

Figure 3-2
Plain weave cross section

If the structure is purely a shade or passive solar device and does not need weather tightness, an open weave fabric with or without coating may be all that is needed. However, if an enclosed weather tight structure is needed the fabric must be coated with a material that accomplishes this function. The coating may be poured in liquid form over the fabric and then allowed to harden or it may be spread with a knife and forced through the fabric. Although the coated material takes on properties of the two materials, the coating contributes little to the overall strength of the fabric.

Sometimes a top coating or lamination is applied over the principal coating for self cleaning or to protect the main coating from ultra violet radiation and possible degradation.

After the coating process, completed fabric rolls can range from 30 or more meters long and anywhere from 1.4 meters to 4 meters wide.

3.2 Fibers

Tensile structures today use primarily five kinds of fibers: polyester, polyolefins, fiberglass, expanded PTFE (Teflon), and aramids. Of these polyester and fiberglass are the most prevalent kinds of materials in use in the tensile structure industry. One stadium in Montreal used the aramid fibers for the main fabric and several military projects use them for their low elongation properties. The expanded PTFE fibers are generally used for fabrics in convertible, seasonal or moveable roof applications.

Polyester

Polyester has been in use since the early 1960s and is the most used structural tensile fabric available (shown in Figure 3-3). It is considered very cost effective and its lifespan ranges normally around fifteen years (some PVC/polyester structures have been up for 23 years in a high solar environment). The polyester ultimately degrades under exposure to ultraviolet radiation but it has very good trapezoidal tear properties and can also be used effectively for up and down or seasonal structures. The coated polyester fabrics generally meet fire resistive tests as defined by codes and can now be recycled through the Texyloop system by Ferrari in Europe.

Figure 3-3
Premium Outlets Mall, Las Vegas NV
PVC-coated polyester fabric (Photo courtesy of Fabritec Structures)

Glass

Glass fibers have a high modulus of elasticity (stiffer than polyester or expanded PTFE) and a high tensile strength. The glass is not subject to UV degradation and meets non-combustibility as defined by most building codes. The PTFE (Teflon) coating is a non-stick coating which resists dirt and dust from adhering to it. Today it is generally used as the fabric of choice for permanent tensile structure applications. Its principal drawback is that the glass fibers are brittle by nature and can crack easily. To overcome this, the fibers are made of very small diameter, however they are still subject to damage under repeated flexure through a low radius of curvature. Handling during shipping and erection must be done with great care because the fabric is susceptible to microscopic cracking which is not visible to the naked eye. As a result, the glass fabric is not used for temporary, seasonal or retractable fabric roofs. The first glass fabric installation was at LaVerne College in 1973 (see Figure 1-7) and it was inspected 35 years later and found to be still in good shape, suggesting this material has a lifespan greater than thirty years. See Chapter 1 for several examples of PTFE coated fiberglass structures.

Expanded PTFE

Expanded PTFE (polytetrafluoroethylene) or Teflon is a chemically inert fiber which is resistant to moisture and microorganisms and has a low deterioration with age. It has the non stick characteristics of PTFE, however it is relatively expensive to manufacture. It does have unique luminosity as a fabric and can be made with translucencies of up to 40%, allowing vegetation to grow underneath the fabric. This fabric is ideally suited in deployable, seasonal and moveable roof systems where its flexibility and high strength are uniquely combined as shown in Figure 3-4. The use of this fabric is relatively recent (10 years), but is growing in popularity.

Figure 3-4
Deployable Bandshell, City Place, FL
PTFE woven fabric

Aramids

The aramids or polyaramids consist of Kevlar and Vectran and are organic materials. They can be made to have a high modulus of elasticity and high breaking strength. The aramids can withstand considerably more flexing than glass but not as much as the polyester or expanded PTFE fibers as shown in Figure 3-5. They are generally considered non combustible, but degrade under UV light relatively quickly and as a result need to be encapsulated or sheathed to protect their strength. However they work well in wet applications and are often used as a rope replacement for steel cables in deployable structures. They are relatively expensive to manufacture, but well worth their cost for special applications where their unique characteristics are important.

Figure 3-5
Department of Defense TME system
High pressure inflatable air beams in Kevlar tubes with PVC coating

Polyethylene

Polyethylene fabrics are woven from a high-density polyethylene slit tape and coated on both sides with a low-density polyethylene coating as shown in Figure 3-6. UV and fire resistive additives are added to both the coating and the woven tapes. This fabric is generally more cost effective than PVC polyester but has a shorter lifespan and is used in applications where fabric cost is essential. It comes in a few colors with light transmission of 5 – 12%.

Figure 3-6
Amphitheater in Pittsburgh, PA
Polyethylene coated polyethylene fabric

Interior Fabric Membranes and Liners

Interior fabrics are used as a second membrane for a variety of reasons including: development of improved thermal characteristics, better sound absorption, as an interior decorative liner, and as a lighting element. Generally for improved thermal characteristics, the interior membrane uses a lighter version of the same exterior coated fabric. However, if the outer layer is porous the inner membrane becomes the thermal barrier and must account for condensation. For improved acoustics, the inner membrane is generally a very porous fabric that allows for sound decay. This fabric could have similar cutting patterns to the outer fabric or become a separate and unique element using completely different fibers.

3.3 Coatings

There are several coatings for architectural fabric structures and generally the coating and the fibers cannot be interchanged as the two elements form a powerful composite material. The most common are described below:

Polyvinylchloride (PVC)

PVC is relatively soft and pliable which enables it to work well with tensile structures. It is typically applied to polyester fibers. It is somewhat resistant to UV light, however generally after about 15 years the plasticizers migrate and the coating becomes brittle at which time it is necessary to replace the fabric. It can be sealed easily using heat or radio-frequency (RF) welding machines. PVC coatings are available in a large variety of colors and can have a blackout layer inserted into the coating for non-translucent applications. The PVC can be printed on or painted using vinyl inks. Outdoor billboards use digital printing techniques on PVC mesh fabrics which are the same material as those used for tensile structures, only a lower strength fabric.

PVC coatings by themselves attract dirt and under high temperatures can seal in dirt to look visually unattractive. In order to avoid this, a series of top surface coatings have been developed. This top-coating, besides improving the fabrics self-cleaning properties, also helps protect the coating from UV light. One of the materials used is Tedlar which is a polyvinylflouride (PVF). Other top coatings for polyester are polyvinyldeneflouride (PVDF) lacquers or urethane. These top coatings provide a similar non stick, self cleaning surface as other fluoroplastics.

PTFE (Teflon)

The resistance of fabrics to dirt is an important element in fabric selection as it affects both appearance and the cost of cleaning. PTFE is chemically inert and used as a coating is a non-stick surface, resistant to moisture and containing a low deterioration with age. The coating is either combined with a fiberglass fabric or as a coating on expanded PTFE woven cloth. PTFE has excellent flame resistive characteristics, moderate translucencies, a high tensile strength and modulus of elasticity.

Silicone

Silicone is used as a protective coating for woven glass fabrics. It has excellent characteristics of UV resistance, flexibility, flame resistance and a very high light transmission as shown in Figure 3-7. It was used frequently in the 1980s but was stopped due to its tendency to pick up airborne particles and dirt. Recently is has reappeared with better cleanliness properties as an interior tensile fabric and is now available again as an exterior tensile structural fabric. The seaming of silicone glass fabrics however requires sewing with PTFE threads or with silicone adhesive tapes. The material is estimated to have a twenty five year lifespan and is a cost effective solution. Unlike the other mentioned coatings, silicone coating is the most environmentally sustainable of the outdoor coatings and will as a result see greater use in the future.

Figure 3-7
Pensacola Municipal Pool, FL
Silicone coated glass fabric

Polyethylene

Low-density polyethylene coatings are used on polyethylene woven slit weaves to create a cost effective fabric alternative when a shorter lifespan material is acceptable. It has a lighter weight than PVC coatings and the coating comes in many colors with a relatively high translucency. It is available with a blackout fabric and can be welded together.

3.4 Films

ETFE Foils

Since the 1980s ethylene tetrafluoroethylene or ETFE foil has been used as a lightweight building material, initially for greenhouse structures because of its inherent transparency, but since the mid 1990s it has become an accepted building skin. Unlike the other materials described in this chapter, ETFE foil is not a woven fiber material and hence cannot be used as a tensile membrane without a cable net or steel frame below. It is most commonly used as a material in pneumatic cushions where thermal properties are important. The air pressure is not structural but it stabilizes the foil and provides the thermal property for the system. The extremely sturdy pillows are made from two to five sheets of ETFE foil welded together along the sides, one on top of the other, with layers of air pumped in between them. The air layers provide increased insulation without decreasing transparency as seen in Figure 3-8.

Figure 3-8
Chelsea Westminster Hospital in London UK
ETFE clear foil pillow

ETFE foil, like PTFE, is a fluoroplastic and as such shares many of the same self cleaning properties as PTFE. The pillows can be printed with a frit pattern so that they create an active solar shading system whereby the middle foil layer can be positioned either underneath the top membrane for greater shade or in the center position to allow more light to enter the space below. A standard 3-layer system performs thermally as a 2-layer system by pushing the middle foil against the top foil in the summer thus decreasing the thermal property and performance of the system in tune with the season. The foil's fire properties lie somewhere between those of PTFE glass and PVC polyester fabrics and will not support combustion. ETFE foil is used only in permanent applications.

3.5 Behavior of Architectural Fabrics

When the fabrics and coatings and toppings are combined, they form architectural fabrics which are the primary structural material of tensile structures. Many different qualities have an impact in the selection of the appropriate fabric for a particular application, including fire resistance, translucency, lifespan, tensile strength, and workability. Today most tensile structures are made of one of two architectural fabrics: PVC coated polyesters and PTFE coated fiberglass.Because of their widespread use, the behavior of these fabrics will be examined in greater detail.

Fire Resistance

All architectural fabrics for tensile structures are at a minimum fire resistive, however some are considered non-combustible. The fabrics differ as to how they pass standard fire tests which have been adapted for fabrics. A brief synopsis of the US tests are:

1. ASTM E84: Surface Burning Characteristics of Building Materials (test known as the Flame Spread or Tunnel Test) – The test is applicable to exposed surfaces such as ceilings or walls, and measures surface flame spread and smoke development relative to mineral fiber cement board (index of 0) and select grade red oak flooring (index of 100). Building codes limit smoke regulation to an index of 450 and categorize flame spread as Class I (0-25), Class II (26-75) and Class III (76-200).

2. ASTM E108: Fire Tests of Roof Coverings (test known as burning brand) – This test procedure actually consists of five separate tests; burning brand, spread of flame, intermittent flame exposure, flying brand and rain test.

These tests evaluate roof coverings to measure their resistance to a simulated fire originating outside the building. Class A tests are applicable to roof coverings that are effective against severe test exposure, Class B tests are applicable to coverings that are effective against moderate exposure and Class C tests are applicable to coverings that are effective against only light exposure. In all cases the covering must not move from its position or present a flying brand hazard. Some fabrics don't pass this test because they melt away during this test.

This test method is specifically designed to test roof covering materials applied over a roof deck. Its application to an unsupported roof, such as a membrane roof, has many problems. Currently it is not referenced in the International Building Code for membrane structures although many local code jurisdictions will require data to be submitted.

3. NFPA 701: Fire Tests for Flame Resistant Textiles and Films – This test method determines the difficulty of igniting flame resistant textiles and films and the difficulty of propagating flame beyond the area exposed to ignition. Small and large scale tests evaluate resistance to small and large ignition sources. The small scale test is the simplest fire test which is based on a 25 mm (1-inch) strip of fabric which is ignited and must self-extinguish within 30 seconds.

4. ASTM E136: Behavior of Materials in a Vertical Tube Furnace at 750 Degrees Celsius. – This is a test of the base material (greige goods) and is not intended to apply to laminated or coated materials. A 40 x 40 mm square stack of material is placed on a furnace to verify that the temperature of the material does not rise more than 30 degrees Celsius above that of the furnace and that no flaming from the specimen occurs after 30 seconds.

The International Building Code (IBC) and other various codes throughout the United States make use of the above tests to classify fabric structures according to fire ratings. In general fiberglass and PTFE based fabrics are able to achieve the non-combustible rating while polyester based fabrics meet fire resistive ratings. Specific building codes applicable to each location should be studied and required testing reviewed before recommendation of a particular fabric material.

Translucency

Fabrics range in translucencies from zero to 95% of outdoor light depending on the material, however generally membrane structures are selected because they create spaces with diffuse volumetric light which allows the user to minimize artificial lighting during daylight hours. This can provide the owner with LEED points and reduce energy consumption for lighting. It should be noted that when reading fabric translucencies, a relatively low translucency over an entire roof creates an extremely bright space, and the designer may well want to use lower translucencies to control the brightness of the interior space.

PVC polyester and polyethylene fabrics often are selected because of their blackout capabilities, which are important features for traveling theaters and circuses. PVC polyester translucencies vary with each manufacturer but generally start around 4% and range up to about 15% based on the coating and the thickness of the yarns. PTFE glass fabrics range from about 5% to 24%. Glass mesh fabrics with PTFE coatings can increase this to about 40% translucency. Silicone glass fabrics range between 12% and 42%. Expanded PTFE ranges from 20% to 40% translucency and polyethylene ranges from 5% to 12%. ETFE foils are films that can be printed with shade patterns (fritting). A clear foil has about a 95% translucency and fritting can reduce this in half. One of the unique qualities of the foil technology is that in a three layer system, the middle layer with a fritted pattern can move pneumatically between two positions changing the amount of translucency and transparency inside the space below. This in effect cuts the translucency in half and acts as intelligent shading system or sun control for the space below.

Lifespan

Fabric lifespans are described by each individual membrane manufacturer generally ranging from 10 to 30+ years depending on the material, its yarns and coatings. On a sliding scale, the polyethylene fabrics will have the shortest lifespan and the PTFE glass fabrics the longest ones. However other considerations are equally important as the material itself, such as whether the structure is deployable, seasonal or permanent. The more deployable a structure is, the shorter material lifespan can be expected. A highly deployable structure can expect to cut its lifespan in half.

Tensile Strength

In tensile fabrics the tensile strength of the fabric is one of the criteria for consideration in selection of a fabric, however the “breaking strength” of a fabric and consequently its allowable working stress are usually taken to mean the strip tensile strength. This is basically a uniaxial test of a bi-axial material.

The tensile strength of fiberglass, polyaramids, polyester and expanded PTFE which we have described are among the highest of architectural fabrics. In these fabrics, the stresses and strains in the warp and fill directions are generally significantly different. The stress-strain curve is also markedly different between the first application and subsequent applications.

There are two types of tensile tests made on fabrics: the strip tensile and the biaxial tests. The strip tensile is similar to a tensile test of steel; however there is no part of the stress-strain curve that is linear. Furthermore the curve is not elastic except after several cycles of loading and unloading. The strip tensile test only roughly approximates the actual conditions in the field. In the strip tensile test, the cross direction fibers are short and this permits the long direction fibers to straighten out during the test, causing an artificially high tensile value to the test. In addition the longer fibers are shorter than in an actual structure and as a result, have fewer weak areas than in a longer yarn and for this reason, tests are averaged. The strip tensile test is the accepted test for tensile strength, but because tensile structure fabric is by nature an orthotropic material, this test remains only an approximation of how the fabric works.

Because of this orthotropic nature of fabric, biaxial tests have been developed. Figure 3-9 shows the cruciform type of biaxial test (pulling the fabric in two perpendicular directions) which allows you to test the fabric in both directions and gives a better simulation of actual loading of a tensile structure. Biaxial testing is the most commonplace tensile fabric testing and is used by many manufacturers as a method of testing the fabric before cutting and fabrication.

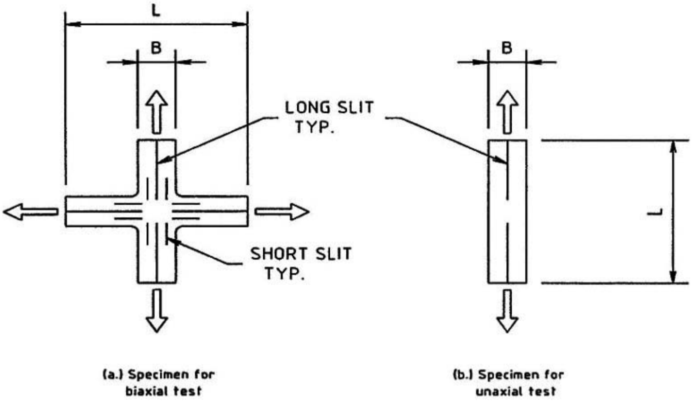

Figure 3-9
Bi-axial and Strip Tensile Specimens
B = specimen width, L = specimen length

Another type of biaxial test is the cylinder test. Here a cylinder of fabric is fitted with a rubber liner and the cylinder is then inflated with air. This causes the fabric to under- go biaxial stress. Fig 3-10 shows a typical biaxial test result from PTFE-coated glass fabric and PVC-coated polyester fabric. Both of these tests were made on plain weave fabrics with cruciform specimens. These curves somewhat resemble the stress-strain curves for other engineered materials, but there are some significant differences outlined below:

1 The difference between the behavior of the fabric in the warp and fill directions.

2. The dependence of the ratio of warp to fill stress on the behavior warp and fill fibers.

3. The difference of strain based on the 1st, 2nd and 3rd loadings.

4. The non-linearity of both warp and fill fibers.

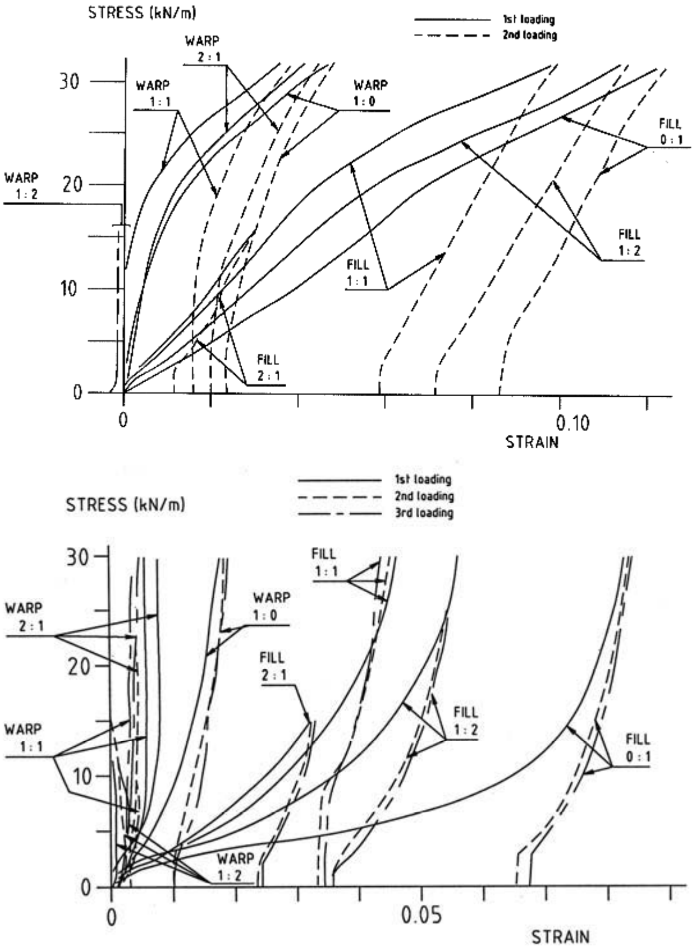

Figure 3-10
Biaxial Stress-Strain Curve
Polyester (top) and glass fiber (bottom)

Because the material behaves very differently for varying ratios for warp and fill stresses, the tests are made on the ratios of 1:1, 2:1 and 1:2. Note the large strains of the first loadings in each of the figures. After the first loading, the subsequent loadings have similar stress/strain curves but they are still non-linear. Figure 3-11 shows the results of linearizing the experimental curves for fiberglass fabric, using the least squares method.

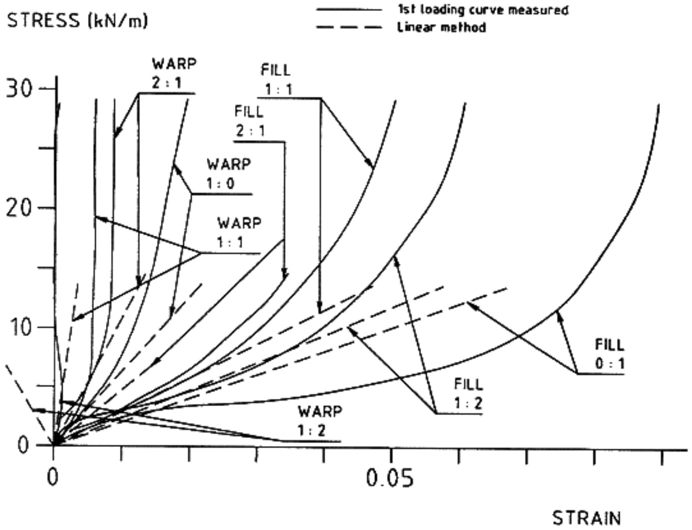

Figure 3-11
Linearization of glass fabric

Note that the linearization shown is for the first loading, and it is shown extending 10 percent of the breaking strength. Different methods of linearization are employed by different researchers.

Generally a fabric is chosen for other characteristics besides tensile strength, since each fabric manufacturer has an array of different strength fabrics one of which will probably meet the required tensile strength for a particular project.

Stretch and Dimensional Stability

As briefly discussed earlier the twist of fibers into yarns and the crimping of yarns around the warp yarns cause a high amount of stretch in the fabric the first time a load is applied. Various techniques have been developed to minimize this problem. The prestressed coating system is one such example where the woven cloth is prestressed by having metal pins hold the fabric while in the coating process. This controls the amount of stretch and more closely equalizes the stretch in warp and fill directions. Another method is to prestress the cloth before installing which reduces the amount of stretch occurring during the lifetime of the structure.

When designing details for tensile fabric structures, it is important to design initial prestressing devices into the hardware, so that the fabric can be pulled out and tensioned to the design stress. With certain fabrics such as some polyester fabrics that have significant creep, additional tensioning capability must be designed to post-tension the fabric after the initial prestress state.

Dimensional stability is also influenced by changes in temperature or water content. Change in length due to temperature change varies with the coefficient of expansion. Dimensional changes also take place due to water absorption which occurs through the capillary action of the yarn fibers. This phenomenon is called wicking. The water not only causes dimensional changes in the fabric but it may also carry micro-organisms that can cause staining and degradation of the fabric. As a result fabrics are generally treated with a mildew resistant application in the coating. Wicking is controlled by the coating and thus it is necessary that the coating remain intact in order to prevent absorption. Coatings contain anti-bacterial agents to prevent bacterial growth wicking into the fabric from the edges and discoloring the coatings.

Workability

Fabrics are manufactured in factories at sites often far removed from the fabrication facilities and the final jobsite. In fact fabric structures because of their low mass are ideally suited as prefabricated building systems. However this means that the fabric must be rolled or folded, unpacked, moved on the construction site, picked up and installed sometimes to hanging cables and frames with site joints. Since tensile structures are often the last part of the construction process (after the more conventional buildings are completed), they require sometimes complicated and intricate erection sequences.

The handling of the fabric bends the fibers and the coatings which may cause damage. This damage is partially a function of the type of fibers used in the fabric. The brittle nature of glass makes fibers of this material particularly susceptible to folding damage. To minimize this effect, glass fibers are drawn to a very small diameter (traditionally beta yarns, now delta yarns). Another response to limit the handling is to ship the fabricated fabric panels to the jobsite in large diameter rolls which minimize the potential of sharp folding and microscopic cracking.

Tearing once a tensile structure is installed can be started by accidents or by vandalism. However once a tear is started, it is imperative that it does not propagate through the fabric to avoid progressive damage/collapse. In order to understand the tear propagation it is necessary to understand the interaction of the yarns and their coating, since they act as one after being joined. This joint action is accomplished by two mechanisms, one chemical and one mechanical. The mechanical is caused by forcing the coating through the weave using pressure and the chemical joining is caused by chemical adhesion of the coatings to the surface of the fibers in the fabric. The principal resistance to tear propagation comes from the balling up of fibers in front of the tear. This brings more fibers into action and places them in a better angle of resistance. Thus it is better if the fibers slip through the coating rather than being held firmly in place. If the fabric has a very tight weave, it may not be possible to get as good a mechanical bond and the chemical bond will be relied upon. So a tight weave which may produce higher tensile strength may at the same time reduce its tear strength.

There are different kinds of tears; some are in plane and some are out of plane, like tearing a sheet of paper. Some of the more common tests are shown in Figure 3-12.

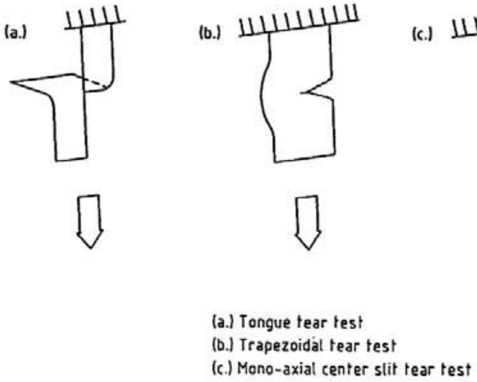

Figure 3-12 (a, b, c)
Tear Tests

There is a strong interaction between tensile strength and tear strength, so that some fabrics may have high tensile strengths and low tear strengths, such as the PTFE coated glass fabrics. This is due to the high modulus of elasticity of the glass combining with the high adhesion of the glass to the PTFE coating. The high modulus prevents the fibers from stretching and the high adhesion prevents the fibers from slipping in the coating, thus properties which would be expected to transmit high strength to the performance of the structure can actually contribute to a reduced usable strength. In the PVC polyester, the trapezoidal tear properties are stronger, but the fibers are weaker and elongate under load.

Most failures of tensile structures are caused by tears, so it is important to understand the relation between the tensile strength and tear properties and this is also the reason why in the design of fabric structures, the factor of safety remains relatively high (FOS 5 – 8).

3.6 Sustainable & Environmental Qualities

In the past few years, the awareness of the carbon footprint of buildings is gaining new importance in architectural design. Tensile fabric structures since their inception in the mid 1960's have used synthetic materials to create longer lasting fabrics in contrast to the traditional cottons which lasted only a couple of years. Most of these materials as described in this chapter contain vinyl chloride, polyethylene or fluorine compounds which off-gas in the manufacturing process and are difficult to recycle. The new interest in sustainability has put focus on this aspect of the materials and the following are some new approaches to creating a more sustainable environment.

The polyethylene-coated polyethylene fabric which has a normal lifespan of 10 years can be recycled locally at recycling centers. Since the coating and the substrate are made of the same material, this is a relatively straightforward process and a lower grade polyethylene can be produced which is used in other products.

The PVC-coated polyester fabrics need to be recycled at special recycling centers since the PVC and the polyester fibers need to be initially separated from each other before they can be recycled. One system that is in use for this fabric is the Texyloop System which is utilized in France. This system grinds off the PVC from the polyester threads after sorting at the facility. Next is the introduction of chemicals to breakdown the membranes and the separation of polyester fibers and PVC into granules. The remaining chemical bath is regenerated into energy used to start the grinding process for the next batch of goods, completing the closed loop system.

The silicone coating and the woven glass fabric are both made of silica and their production permits a relatively “environmentally safe” material. As a result the material produces no toxic emissions or residual odors in its fabrication.

3.7 Summary

In conclusion, there are primarily six different fabrics (including foils) which are used for architectural membrane structures today: PVC polyester, PTFE glass, Silicone glass, Expanded PTFE, Polyethylene, and ETFE foil. There is no one “best fabric” as each one of these fabrics is best suited for a particular use and particular program and it is essential in the early stages of a project to understand the correct material for a particular application. Each material requires a different detailing approach based on its performance characteristics, so its selection early on is necessary to avoid redesign in a project.

Chapter 4
Loads

4.1 General

Tensile membrane structures are subject to the same climatic, environmental and service loads as other structures with the same location, exposure and use. Design loads should be determined from the building code in the structure's jurisdiction or per the reference standard ASCE 7. Application of ASCE 7 to tensile membrane structures can be difficult due to the often unique forms of these structures, the surface characteristics of the membranes, and the inherent flexibility of most tensioned membrane systems. The following issues should be considered in determining loads:

1. Tensioned membrane structures are unique in their capability to carry very high loads in relation to their self-weight. This is due in part to the "large" deflection behavior of these structures that renders them relatively insensitive to specific load distributions.

2 Self-weight of the membrane is very small, generally less than 20 N/m^2 (0.42 psf) and can be neglected in most instances.

3. Seismic loads are frequently not a factor in design due to the low mass of tensioned membrane structural systems.

4. Code mandated minimum roof live loads based on tributary area are applicable to tensioned membrane roof structures, however the concept of tributary area may not be literally applicable to many membrane structures. See section 4.3.

5. Wind is always significant and yet design loads can be difficult to determine from ASCE 7 and other codes due the often unique and complex surface geometry of tensile membrane structures as well as their large deformation behavior.

6. In locations/climates where snow is significant it will be a major design consideration for roof structures. As with wind, design roof snow loads can be difficult to determine due to unique surface forms, surface characteristics and flexibility.

7. While membrane and cable structures are generally prestressed, system "prestress" is really a system characteristic not a load.

8. Load combinations generally must be considered as applied. Superposition of load effects is not valid in non-linear systems.

9. As of this writing there is no Load Resistance Factor Design standard methodology for tensile membrane structures. As a consequence of their non-linear behavior LRFD methodology can result in significant difference in design outcome from Allowable Stress Design.

10. As with other structures, some thought should be given to load combinations to produce the most unfavorable effects for a given structural system and its components.

Other than these challenges, determination of appropriate design loading is the same as for other structures and systems.

4.2 Dead Loads

These structures are typically very lightweight. Commonly employed fabric membrane materials have a unit weight of 8 N/m^2 to 24 N/m^2 (0.17 to 0.50 psf). Film materials such as ETFE are lighter. Generally, any attached equipment such as lighting speakers or architectural features may best be considered as live load and included or excluded from load combinations as necessary to produce maximum demand.

4.3 Live Loads

Tensile membrane structures are most commonly employed in roof and building envelope applications or for partially or fully open canopies. Where and if used in other applications live loads per the jurisdiction's building code must be employed. For roof applications the standard live load per ASCE 7 is dependent upon the tributary area supported by the member in question and the roof slope. An exception is noted for "awnings and canopies of fabric construction supported by a lightweight rigid skeleton structure" for which the minimum live load is 240 N/m^2 (5 psf). There are requirements for single point loads, most notable a 1.33 kN (300 lb) point load for roof surfaces subject to maintenance workers.

Not including the exception for fabric awnings and canopies, tensile membrane structure roofs are subject to live load reductions. However, the concept of tributary area is not directly applicable to most tensile membrane structures as a large percentage of the system, indeed the entire structure can be engaged in resisting even a single concentrated load. In consideration of the fabric membrane, the "tributary area" can be considered as the region affected by load application and in all but quite small structures or where the membrane is used in discrete panels, this area will be greater than the 56 m^2 (600 ft^2) required to reduce the minimum live load to 580 N/m^2 (12 psf).

4.4 Wind Loads

Wind produces the governing loading for many tensile membrane structures. Wind loads are transient and so careful attention to slackness or “loss” of prestress in the membrane under wind is important to prevent detrimental flutter. The membrane form and prestress will need to be revised in design if wind loading produces excessive slack regions.

ASCE 7 addresses the climatic and exposure parameters for wind load determination. However, development of surface loads from the standard can be quite difficult, as the pressure coefficients provided do not cover the unique forms of tensile membrane structures. The wind pressure coefficients in the standard and other codes and references are derived from hundreds of wind-tunnel studies of various building shapes almost all of which are rectilinear or are simple surfaces of revolution such as barrel vaults and spherical surfaces. The pressure coefficients for these later surfaces may be of value in establishing coefficients for some simple tension structure forms; however, none of the standards provide real coefficient values for the complex double curvature shapes common in tensioned fabric structure design. Similarly pressure coefficients for freestanding roofs (monosloped, pitched, and troughed) in ASCE-7 are not directly applicable to most tension structure canopy forms. In summary there is simply very little US code or standard data available for unusual and complex shapes.

Ideally wind loads for unique forms would be determined by testing in a boundary layer wind tunnel. See Appendix 2 for a discussion of wind tunnel studies. For smaller structures wind tunnel modeling is often not possible due to the cost and time required. Fortunately as the peak stresses in the tensile membrane and member forces in many common tension structural systems are not particularly sensitive to specific load distributions but rather overall loading, conservative bounding load conditions can be established. For large structures where this might prove to be too conservative and hence uneconomical or for systems that are sensitive to load distributions, wind tunnel studies should be performed.

Where wind tunnel testing is not an option the following approach is of use:

1. Consider a uniform uplift case using a pressure developed for the exposure, height and nature of the structure. The uniform uplift pressure should be greater than the mean uplift that can be realistically expected over the membrane surface. Keep in mind that this may not be a real load condition, but it can provide useful demand information for design.

2. Consider the maximum positive pressure conditions that are likely to be created by wind events. As with uplift, a uniform case may be useful.

3. Develop wind cases that produce the maximum “imbalance” likely to be created by wind events for critical elements such as arches or guyed masts.

4. Develop wind cases that produce the maximum lateral load on the structure in primary directions. In many instances, wind will produce the governing

lateral loads on the system, so the cases should be conceived with this in mind.

All of this requires prior understanding of the structural behavior of the specific structure being designed so that the wind conditions developed produce critical limits for the various components of the structure. This must include consideration of conditions likely to produce the maximum demand on foundations and anchorages.

Where deformations due to wind need to be limited, ample allowance should be included as displacement demand is a consequence of specific non-uniform load distributions. See the discussion of this in Section 4.5 relative to snow.

4.5 Snow Loads

Tensioned fabric roof structures have enjoyed significant success in cold climates around the world. There are numerous structures designed to resist significant snow loads. However, special care is necessary in designing tensile membrane structures for snow as large deflection behavior causes tensioned membrane roof structures to be uniquely vulnerable to ponding, typically snow induced.

The basic site based parameters for determining snow loads are provided in ASCE 7. ASCE 7 provides definition of over-all design snow loads for roof structures as well as definition of drift loads and sliding snow surcharges for a variety of roof geometries. However, as with definition of pressure coefficients for roof wind loads, these do not apply to the often unique shapes and forms of tensile membrane structures. Many of these tensile forms create unique drifting patterns and because of the low friction surface characteristics of almost all structural membrane materials, potential consolidation of snow loads from sliding. Consequently it is difficult to predict snow load distributions on many membrane roof surfaces.

As with wind loading, model studies can aid in determination of snow loads for unique roof forms of tensile membrane structures. Snow drifting for unique shapes can be predicted in water flume studies and by numerical finite area models. This has been performed for a number of large tensile membrane roof structures including Canada Harbour Place, Vancouver, BC, Lindsay Park Sports Centre, Calgary, Alberta, (Figure 4-1) and Seoul World Cup Stadium, Seoul, Korea. While only warranted for either large projects or structures subject to extreme snow conditions, such studies are the best means of determination of overall roof snow loads and local drifting maxima for unique roofs.

Importantly, much like the code, even these studies have limited quantitative value in providing loading distributions that might produce ponding. Unlike wind load distributions which can be established in boundary layer wind tunnel studies, specific load patterns that arise as a consequence of the combined effects of drifting and sliding snow are not so readily predictable, more so when combined with effects of cyclic freeze/thaw cycles, melt water migration, and rain. Prediction of specific snow load distributions is further complicated by the deformation of the structure under loads that can be sufficient to affect sliding and melt water migration. Generally these effects cannot be readily modeled or quantitatively studied in the context of project design.

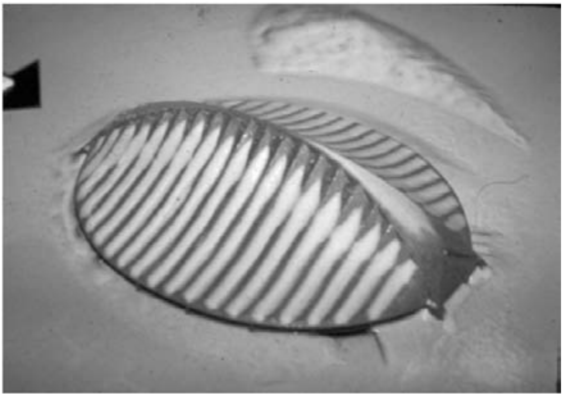

Fig. 4-1
Snow Drifting Model for Lindsay Park Roof

4.6 Rain Loads

Ponding instability caused by rain in the absence of other loads, such as wind or snow, can be quantitatively addressed in non-linear analysis. In practice this is rarely necessary, for if a portion of a tensile membrane roof surface is found not to drain under small gravity loads, it is probable that it will pond. Generally the stiffness of the fabric membrane structure will be found to increase with deformation but usually not at an inadequate rate to prevent overload when a sufficient source of water is present. In such instances the structures shape (form and prestress) will typically require modification.

Consideration of rain on snow is discussed in Section 4.5 above.

4.7 Earthquake

Many tensile membrane structures defy easy categorization with respect to lateral force resisting systems. Often the entire structure is engaged in resisting lateral (as well as vertical) loads. The systems are generally quite soft and have very low mass, especially with respect to their surface area.

Chapter 5
Form Determination

5.1 Basic Design Principles

Designers attracted to fabric structures are often intrigued with the wide range of forms which can be built. Although the range of possible forms is extensive these are not "free-form" structures. They must rigorously conform to the physical principals which govern their behavior as limited by the characteristics of the materials from which they are built.

5.1.1 Tensile Behavior

Exploration and exploitation of the nature of tensile behavior is the basis for the design of fabric structures. The use of structural systems and materials which resist loads in tension govern their design. Ropes and cables are the simplest tensile elements. Structural forms may be generated by arranging cables between fixed boundaries. Compression struts or bending components may be incorporated into the web of tension elements. Membranes are generally made by combining or weaving numerous linear tension components. Membranes structurally act as tension surfaces. Loads applied to membranes must be resolved in their surface, as they typically have negligible compressive, flexural or shear strength. Cables may be used to establish membrane boundaries or "reinforce" a membrane by dividing the surface into manageable portions.

Supporting elements such as masts, arches and perimeter beams typically have significant compressive, flexural and shear strengths. The tension membrane surfaces are usually visible in the completed construction. Tensile structure systems typically use different materials and forms to resist various types of forces. Their dramatic imagery is often highlighted by the juxtaposition of the tensile, compression and bending components.

5.1.2 Geometric Classification

Surfaces are generally classified by their curvature. Cylinders and cones are singly-curved surfaces. These forms have curvature in only one direction and can be made from a flat surface. They are considered developable. Dome and saddle shapes are doubly curved and as such are not developable. Methods of approximating these surfaces are discussed in Section 9.1.1, Patterning – Lay Down from 3D to 2D. When the principal curvatures at a point are on the same side of the surface, as in a dome, the surface is synclastic. Figure 1-4, radome, and Figure 1-5, Osaka Pavilion, are examples of synclastic surfaces. When the principal curvatures at a point are on opposite sides of the surface, as in a saddle shape, the surface is anticlastic. Figure 1-6, German Pavilion, is an example of an anticlastic surface.

5.1.3 Equilibrium Considerations

Since tensile structures cannot develop out-of-plane stresses, loads are always resisted by planar axial forces. When no external load is applied, the prestress tensile forces at every point must balance each other. This condition forces a membrane or cable net into an anticlastic surface. At any point, two sections can be identified which pull on that point in opposite directions. Applying a pressure load to any point will tend to increase the tension in one direction and decrease it in the opposite. This will force the surface to deform until the axial forces of the surface balance the applied load. Applying a suction load will increase the membrane tension in the other direction. As shown in Figure 5-1, every point on a stable tension surface must satisfy axial equilibrium:

$$\sum F_X = 0 \tag{5.1.3-1}$$

$$\sum F_Y = 0 \tag{5.1.3-2}$$

$$\sum F_Z = 0 \tag{5.1.3-3}$$

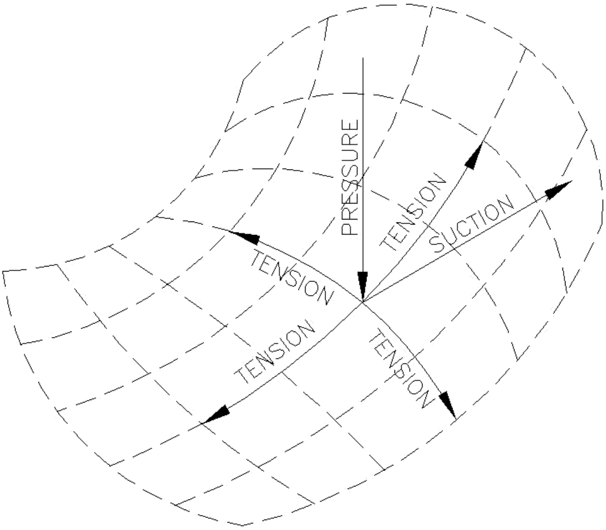

Figure 5-1
Axial Force Equilibrium
(Drawing by author)

5.2 Forms

The equilibrium conditions required for stability of a tensioned fabric structure are simple and there are many forms which will meet these requirements. The following examples illustrate some possible solutions.

5.2.1 Cone-Like Forms

Cone like or hyperboloid surfaces are generated when a membrane is stretched between two vertically displaced closed boundaries. The boundaries may be of similar size and shape, as in many cooling tower forms, or they may be significantly different, as in many mast supported tent forms. The boundaries may be circular, elliptical, rectangular or any continuously convex closed shape. A teardrop ring made from flexible cable at the top of a cone may also be used to minimize uneven membrane stress concentrations at the upper or lower boundary.

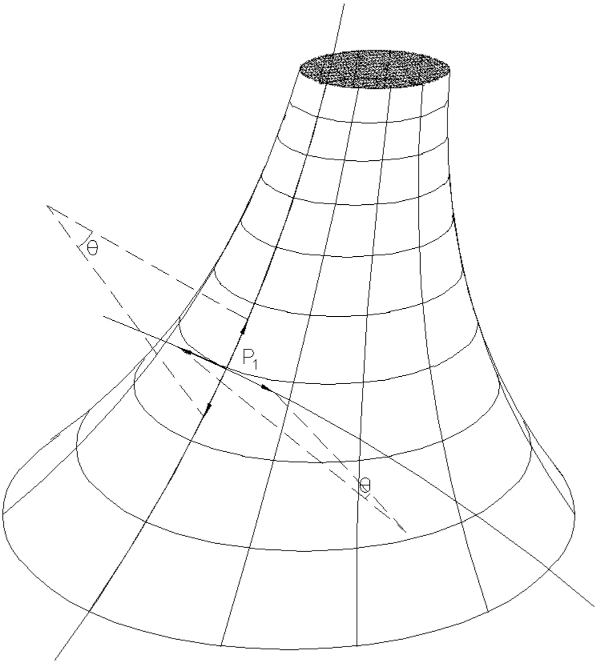

Figure 5-2
Cone-Like Form
(Note: The arc of principal curvature at P_1 toward the inside of the cone is not generally horizontal)
(Drawing by the author)

The conic form is easily investigated with simple physical models, as discussed in Section 5.3. The range of viable forms and proportions is significantly increased by the use of radial cables, which are generally located on the inside surface where they help balance the circumferential fabric tension. One principal curvature generally follows the meridian lines. The other principal curvature is generally perpendicular to the meridian lines. As highlighted in Figure 5-2, they have opposite curvature.

In mast supported conic structures, the top of the mast may be restrained by external cables or held by the membrane and radial cables. If it is otherwise unrestrained, the mast's position will shift as the tension in the fabric and cables attached to it change under applied load. This movement facilitates geometric changes in the membrane curvature and tends to reduce membrane stresses.

Many designers allow for the possibility of uncontrolled membrane failure and provide alternate support systems for masts and other primary support components. Loss of membrane tension in a conic form typically relieves the curvature in radial cables resulting in relatively large movement at the top of the cone. External restraining cables can be used to reduce the possibility of unacceptable movement of supporting masts.

Figure 1-7, La Verne College Activities Center and Figure 1-8, Haj Terminal provide examples of cone like tensioned membranes.

5.2.2 Saddle Forms

When a membrane is stretched within a continuous non-planar boundary, the surface forms a saddle. Visually, this surface is very similar to a portion of an anticlastic shape. The curvature of the membrane surface is dependent on the shape of the boundary, the influence of intermediate cables and the relative tension in each direction of the membrane. The boundaries of saddle forms may be gently undulating, discrete segments, rigid sections or flexible cables between rigid support points. The principal curvatures are generally relatively easy to identify. As highlighted in Figure 5-3, the surface is anticlastic, the centers for each of the principal radii of curvature are on opposite sides of the membrane surface.

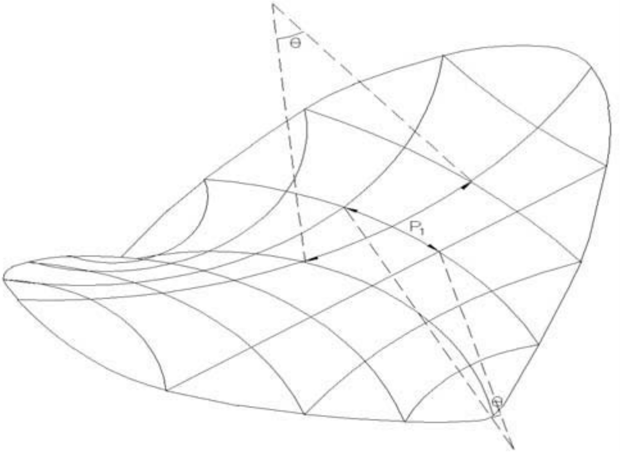

Figure 5-3
Saddle Form
(Drawing by the author)

5.2.3 Ridge-and-Valley Forms

A variation of the saddle form occurs when the perimeter is defined by cables. In these structures, cables define the fabric boundaries and the fabric tension defines the cable profile. Figure 1-13, Pier Six Concert Pavilion is an example of ridge-and-valley tensioned membranes.

5.2.4 Hybrid Forms

Equilibrium of tensioned fabric structures requires that all prestress loads balance within the membrane surface. Complex forms can be developed which comply with this basic criterion. Masts may be supported by cables. Membrane edges may be defined by combining beams, arches and cables. Depending on the complexity of the surface, cables may pass from one side of the membrane to the other as the orientation of primary curvature changes. Figure 1-9, Riyadh Stadium and Figure 1-11, Chene Park Amphitheater are examples of hybrid forms.

5.3 Models

Building and experimenting with physical models can be an important part of the design process. They are a very effective way to investigate the possibilities and limitations of tensile structures. Models are also useful in presenting design options to clients. To get a meaningful understanding of the actual behavior, the physical model must mimic the behavior of the prototypical structure.

Most tension structures are designed to have uniform prestress in their membranes. In this condition, there is no shear stress in the membrane. This is also the condition which minimizes the membrane surface area for a given set of initial conditions.

5.3.1 Soap and Liquid Plastic Films

Soap and liquid plastic films are excellent starting media to investigate the possibilities and limitations of uniformly stressed membrane surfaces. Liquids have tensile capacity but no shear capacity. The surface forms resulting from any boundary frame and applied load will be uniformly stressed with minimal surface area. Soap films in wire or string frames will form the anticlastic shapes of prestressed structures. At each point in the surface, the principal curvatures will be in opposite directions (Figures 5-4 & 5-5).

A wire loop can be used to investigate the uniform stress, minimal area, and surfaces associated with a variety of rigid boundaries. By experimenting with different loops, the designer can gain an understanding of the range of possible forms. By stretching the boundaries until the film breaks, the range of shapes possible with a uniform stress field can be explored (Figure 5-6).

Threads can be used with soap films to model cable boundaries. The shapes of these boundaries are determined by the length of the thread and the stress field of the film. The teardrop top cable is an idealized structurally efficient boundary to support a conic surface (Figure 5-7).

Films can also be used to investigate the behavior of a membrane under an applied load. If you blow on a soap film, the shape will change to keep equilibrium. The tension in the film is a function of the soap mix and is generally constant over the surface. The geometry changes such that the sum of the tension forces in each of the principal directions of curvature balances the applied load. If a sufficiently high load is applied, the surface will become synclastic with all membrane tensions acting opposite the applied load.

Investigating the behavior of liquid films is extremely useful. However, there are several significant differences between these models and the membrane materials used in tensioned fabric structures. Structural membranes are not as flexible as liquid films. The deformation of structural membranes is dependent on their biaxial stress/strain characteristics as well as the applied load.

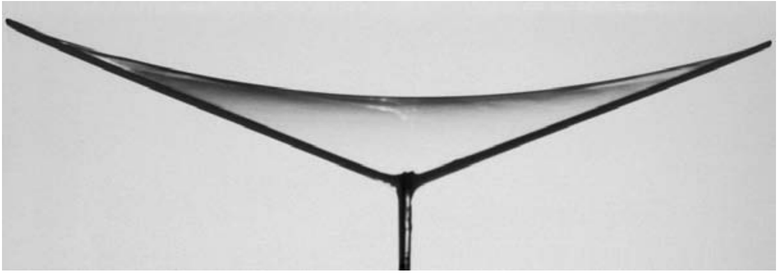

Figure 5-4
Saddle Form Film Model with Straight Boundaries
(Photograph courtesy of ILEK Institut für Leichtbau Entwerfen und Konstruieren,
Universität Stuttgart, Germany)

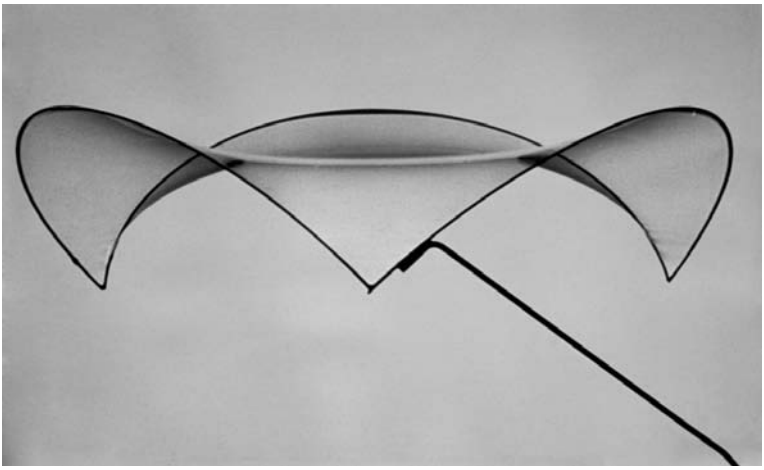

Figure 5-5
Saddle Form Film Model with Curved Boundaries
(Photograph courtesy of ILEK Institut für Leichtbau Entwerfen und Konstruieren,
Universität Stuttgart, Germany)

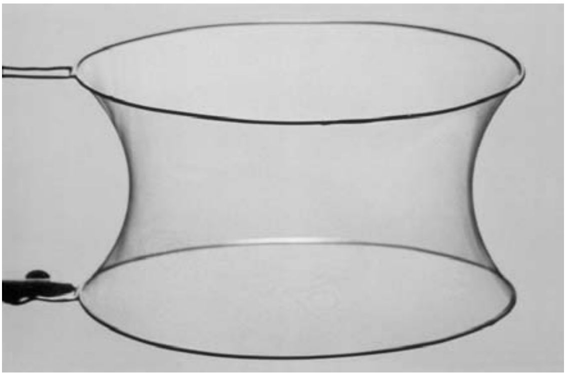

Figure 5-6
Cone Like Film Model
(Photograph courtesy of ILEK Institut für Leichtbau Entwerfen und Konstruieren,
Universität Stuttgart, Germany)

Figure 5-7
Cone Like Film Model with Flexible Tear Drop Boundary
(Photograph courtesy of ILEK Institut für Leichtbau Entwerfen und Konstruieren,
Universität Stuttgart, Germany)

5.3.2 Stretchy Fabric

Stretchy lightweight fabric can be used to explore a wide range of self-tensioning forms. The implications of high local tension can be studied by noting how uniformly the fabric is stretched. Stiff or elastic string can be used to model the effect of cables. Dowels and metal wire may be used to model struts and masts. (Figure 5-8)

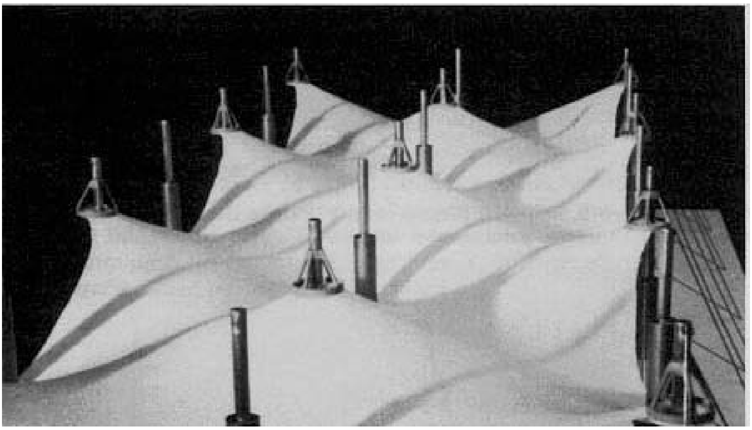

Figure 5-8
Fabric Model
(Photograph by the author)

5.3.3 Wire Mesh

Once the basic form is established, carefully constructed models using light gage wire, chain or wire mesh may be helpful in defining the prestress shape or studying the structural behavior under applied load. Several designers have used wire models in their final analysis of the geometric form and structural behavior. They may be used for structures where the surface is defined by a mesh. A mesh model may also be used to approximate a membrane surface. A mesh approximation may be particularly useful in simplifying the analysis for hand techniques.

5.3.4 Detail Studies

Carefully designed connections are critical to the performance of most tensioned fabric structures. The complex three dimensional geometry of tensioned membrane structures are often difficult to visualize and describe in drawings. Building simple models is a very useful way to understand how several cable lines and membrane edges should meet. They are also useful in checking for the necessary clearances in complex weldments and for bolt and pin installation (Figure 5-9). Connections can also be modeled and studied digitally (Figure 5-10).

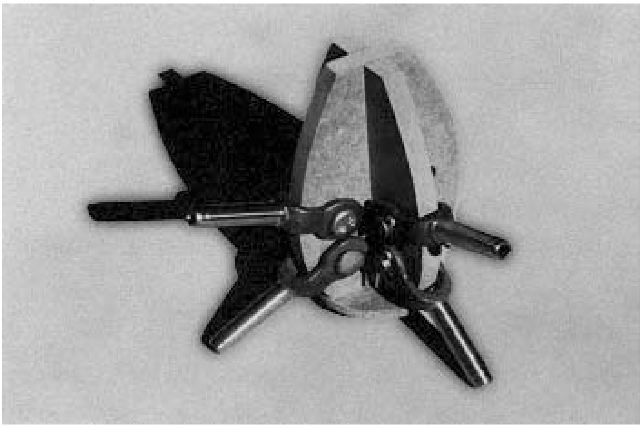

Figure 5-9
Detail Study
(Photograph by the author)

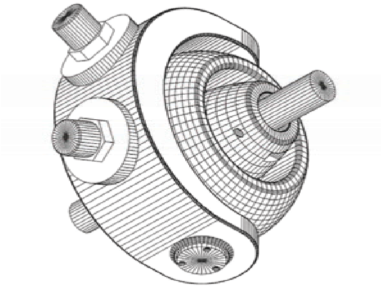

Figure 5-10
Detail Study
(Detail drawing courtesy of Bernard Viry)

5.3.5 Construction Studies

Efficient and safe construction of tensioned fabric structures requires a thorough understanding of the erection sequence and procedure. Cranes and equipment will need to be strategically placed. The placement of membrane sections must be carefully coordinated with the installation of temporary and permanent cables, masts and supporting structures (Figure 5-11).

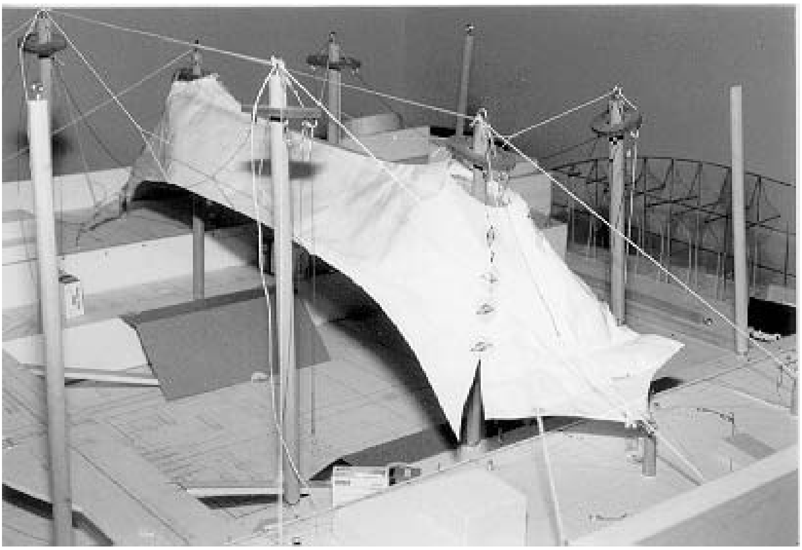

Figure 5-11
Construction Study Model
(Photograph courtesy of Birdair, Inc)

5.4 Simple Preliminary Analysis

Although the geometric description of a tensioned surface may be complex, all the rules of static equilibrium hold throughout every tensioned membrane. There are a variety of simple ways to consider and analyze membrane surfaces which do not require the solution of numerous non-linear simultaneous equations. These techniques are extremely useful in investigating the viability and general behavior of possible forms. By investigating the general behavior at several critical locations, the designer can quickly get an indication of the probable behavior of the overall structure.

The curvature of most surfaces can be reasonably approximated by circular arcs over a finite distance. This simplifying assumption can be used with the structural characteristics of membranes: no compression, bending or shear, balanced tension forces and minimal surface area to develop a reasonable analysis.

For example:

To estimate the increase in tension in the membrane surface due to an applied wind pressure:

1) Identify cross section with the least curvature concave to the load.

2) Approximate the curvature with a circular arc. This may be done directly or calculated from chord length and sag. (Figure 5-12)

$$R = (C^2 + 4S^2)/8S \quad (5.4\text{-}1)$$

R = Radius
C = Chord length
S = Sag

3) Calculate the tensile force necessary to resist a uniform pressure on the estimated circular arc.

$$T = P*R \quad (5.4\text{-}2)$$

T = Tension
P = Pressure
R = Radius

Consider a membrane segment with a span or chord length of 10.0 m and sag of 0.5m. The radius-of-curvature is:

$$R = (10.0^2 + 4.0 * 0.5^2)/(8 * 0.5) = 25.25 \text{ m} \quad (\text{ref } 5.4\text{-}1)$$

If a pressure of 0.6 kN/meter^2 is applied to the surface, the membrane tension will be:

$$T = 0.6 * 25.25 = 15.15 \text{ (kN/meter)} \quad (\text{ref } 5.4\text{-}2)$$

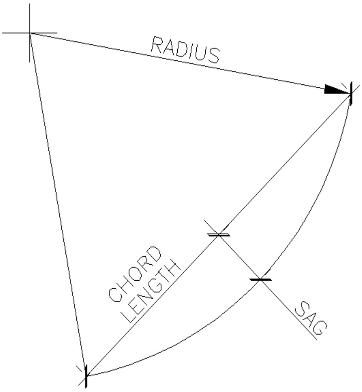

Figure 5-12
Curvature, Pressure and Tension
(Drawing by the author)

As the membrane tension increases it will stretch. This increase in length results in a decrease of the radius-of-curvature. This deformation increases the maximum pressure which can be resisted at a specified tensile capacity.

For example:

Estimate the change in arc length and the corresponding increase in pressure resistance of the previous example.

1) Calculate the membrane arc length.

$A = ((C^2 + 4S^2)/4S) * \cos^{-1}((C^2 - 4S^2)/(C^2 + 4S^2))(\text{radians})$ (5.4-3)

$A = ((10.0^2+4*0.5^2)/(4*0.5))*\cos^{-1}((10.0^2-4*0.5^2)/(10.0^2+4*0.5^2))$

$= 10.0665$ m

2) Estimate the change in membrane length due to the applied load.

$A_\delta = TA_0/b\,E$ (5.4-4)

A_δ = Change in arc length
T = Membrane tension
A_0 = Starting arc length
b = width of membrane segment being considered
E = Modulus of elasticity of the membrane

Note: E is typically noted in units of force per unit width for membranes.

$A_\delta = (15.15* 10.0665)/ (1.0 * 1200) = 0.1271$ m (ref 5.4-4)
(slightly over 1% elongation)

3) Calculate the new arc length.

$A_1 = A_0 + A_\delta$ (5.4-5)

$A_1 = 10.0665 + 0.1271 = 10.1936$ m (ref 5.4-5)

4) Iterate to calculate the radius-of-curvature based on the new arc length.
$C = 2R\sin(A_1/2R_1)$ (5.4-6)
A_1 = Adjusted arc length
R_1 = Adjusted radius
C = Chord length
Note: angle is given in radians

R = 15.0553 m

5) Calculate the membrane tension associated with the adjusted radius-of-curvature.
$T_1 = P*R_1$ (ref 5.4-2)
T_1 = Adjusted membrane tension
$T_1 = 0.60 \times 15.055 = 9.033$ kN/meter

Note: This tension is less than the originally calculated tension of 15.15 kN/m. The difference is due to the non-linear geometric deformation of the membrane under applied load. However, as the newly calculated tension is less than that used to calculate the membrane elongation, the actual membrane elongation will be less than assumed and the actual radius of curvature will be greater 15.0553 m. Determining the actual deformed shape under a specified load requires solving this non-linear problem.

As can be seen in the above example, the load carrying capacity of a membrane surface is sensitive to surface curvature. As the distance between supports is increased, the available curvature typically decreases. This reduces the membrane's load carrying capacity. For a given design span, the effective membrane span can be reduced by adding supporting cables. This will increase the load carrying capacity of the membrane. However, as the number of supports increases, the cost of the structure will probably also increase. Membrane structures with sag-to-span ratios of 1:8 to 1:20 are typically the most viable.

5.5 Computer Analysis

The analysis of tension structures is a non-linear problem. The stress-strain relationship of membrane materials is highly non-linear. Most analyses of tensioned fabric structures use a constant representative value for the membrane stiffness. Structural behavior is not usually highly dependent on the particular stress/strain relationship used. This can be verified by evaluating the structural behavior within an envelope of moduli. The geometric deformations associated with applied loads usually influence the resolution of those forces. Analyzing this geometric non-linearity is usually critical to understanding membrane behavior.

Load analysis is done from a starting shape that is in equilibrium with an initial prestress. Finding the unique shape compatible with a given prestress condition usually requires a non-linear analysis. Form finding is the process of determining the initial equilibrium shape.

Computer analysis of tensile structures is based on the assumption that it is possible to approximate the behavior of smooth surfaces by defining the geometry, material characteristics, and applied loads at a discrete number of locations. In computer modeling, cables, membranes, struts and beams are divided into finite elements. The elements may correspond to a structural component or a portion of a component. The elements are joined at nodes. The nodes are used to define the spatial configuration of the structure. Some nodes may be restrained, others will be free to translate and rotate. The elements may be defined with elastic material properties, defined to preserve a specified length or defined to preserve a specified force. As computational capability has become more readily accessible, considerable refinement in the assumptions used has been possible. A variety of analytic strategies is possible and has been incorporated in the various computer algorithms. Although methods of solving the non-linear equilibrium problems associated with the analysis of tensile structures differ, their results must converge on the unique solution which satisfies equilibrium.

Tensioned fabric structures are usually modeled using two dimensional elements with different properties in the warp and fill directions. Some designers find it convenient to analytically model a membrane surface as a network of cables or bars. Uniaxial elements are simpler to formulate and analyze than biaxial elements. If the analysis mesh is set with nodes on the principal surface curvatures and the element properties are adjusted to reflect the effective tributary area and stress, the behavior of a membrane surface can generally be adequately examined with cable elements. Accounting for biaxial interaction, such as the effect of Poisson's ratio (typically governed by crimp interchange in woven membranes as discussed in Chapter 3) requires special adjustment during the analysis. However these are usually not significant.

Membrane elements have been formulated for a variety of computer analysis techniques, some of which are quite sophisticated. Simple constant strain triangular elements are available in most programs. More sophisticated 4, 6 and 8 node elements incorporating non-linear material characteristics are also available. The discussion in Sections 5.5.1A, 5.5.1B, 5.5.2 and 5.5.3 will use cable elements to demonstrate several analytic approaches.

5.5.1A Linear Stiffness Analysis

In the general stiffness method, a set of simultaneous equations are generated to represent the translational and rotational equilibrium at each node in the structure. In a static analysis the relationship between the loads, stiffness and displacements can be represented by the matrix equation:

$$P = K\,\delta \qquad (5.5.1A\text{-}1)$$

where:

$\boldsymbol{P}$ is a vector of resultant prestress and applied nodal loads
$\boldsymbol{K}$ is the stiffness matrix
$\boldsymbol{\delta}$ is a vector of nodal displacements

There are several ways to solve this set of simultaneous equations, either directly or indirectly. For example, if we wish to analyze the effect of an applied load of 2.0 kN on the prestressed three bar network shown in Figure 5-13.

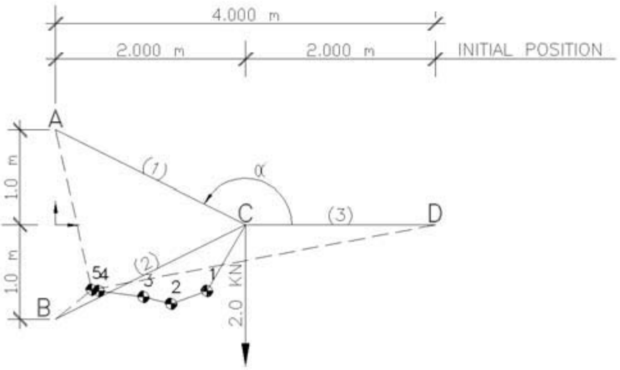

Figure 5-13
Stiffness Example
(Drawing by the author)

In this example the supports at A, B & D provide translational but not rotational restraint. The bars are steel, with equal areas.

Given:

A(0,1000)
B(0,-1000)
D(4000,0)
P_{CX}=0.0 kN
P_{CY}=2.0 kN

And:

A = 40 mm^2 for each bar
E =200 kPa (kN/mm^2) for each bar
F_i= 10.0 kN prestress in each bar

Find:
$C_{(XY)}$ The displacement of point C
F_i The corresponding force in each bar

Solving:

$$\boldsymbol{P} = \begin{vmatrix} \cos\alpha_{CA}P_{CA} & +\cos\alpha_{CB}P_{CB} & +\cos\alpha_{CD}P_{CD} & +P_{CX} \\ \sin\alpha_{CA}P_{CA} & +\sin\alpha_{CB}P_{CB} & +\sin\alpha_{CD}P_{CD} & +P_{CY} \end{vmatrix} \qquad (5.5.1A\text{-}2)$$

$$= \begin{vmatrix} -0.8944(10.0) & -8944(10.0) & +1.0(10.0) & +0.0 \\ +0.4472(10.0) & -0.4472(10.0) & +0.0(10.0) & -2.0 \end{vmatrix}$$

$$= \begin{vmatrix} -7.889 \\ -2.000 \end{vmatrix}$$

$$\boldsymbol{K}_{11} = \cos\alpha^2_{CA}\,\frac{A_{CA}E_{CA}}{L_{CA}} + \cos\alpha^2_{CB}\,\frac{A_{CB}E_{CB}}{L_{CB}} + \cos\alpha^2_{CD}\,\frac{A_{CD}E_{CD}}{L_{CD}} \qquad (5.5.1A\text{-}3)$$

$$= \frac{(-.8944)^2(40)(200)}{2236} + \frac{(-.8944)^2(40)(200)}{2236} + \frac{(1.0)^2(40)(200)}{2000}$$

= 9.724 kN/mm

$$\boldsymbol{K}_{12}=\boldsymbol{K}_{21}=\sin\alpha_{CA}\cos\alpha_{CA}\,\frac{A_{CA}E_{CA}}{L_{CA}} + \sin\alpha_{CB}\cos\alpha_{CB}\,\frac{A_{CB}E_{CB}}{L_{CB}} + \sin\alpha_{CD}\cos\alpha_{CD}\,\frac{A_{CD}E_{CD}}{L_{CD}} \qquad (5.5.1A\text{-}4)$$

$$= \frac{(.4472)(-.8944)(40)(200)}{2236} + \frac{(-.4472)(-.8944)(40)(200)}{2236} + \frac{(0)(1.0)(40)(200)}{2000}$$

= 0.0 kN/mm

$$\boldsymbol{K}_{22} = \sin\alpha^2_{CA}\,\frac{A_{CA}E_{CA}}{L_{CA}} + \sin\alpha^2_{CB}\,\frac{A_{CB}E_{CB}}{L_{CB}} + \sin\alpha^2_{CD}\,\frac{A_{CD}E_{CD}}{L_{CD}} \qquad (5.5.1A\text{-}5)$$

$$= \frac{(-.4472)^2(40)(200)}{2236} + \frac{(-.4472)^2(40)(200)}{2236} + \frac{(0)^2(40)(200)}{2000}$$

= 1.431 kN/mm

$$K = \begin{vmatrix} 9.724 & 0.0 \\ 0.0 & 1.431 \end{vmatrix}$$

$$\boldsymbol{\delta} = \begin{vmatrix} \boldsymbol{\delta}_{CX} \\ \boldsymbol{\delta}_{CY} \end{vmatrix}$$

Solving:

$$\begin{vmatrix} -7.889 \\ -2.00 \end{vmatrix} = \begin{vmatrix} 9.724 & 0.0 \\ 0.0 & 1.431 \end{vmatrix} \begin{vmatrix} \boldsymbol{\delta}_{CX} \\ \boldsymbol{\delta}_{CY} \end{vmatrix}$$

$$\begin{vmatrix} \boldsymbol{\delta}_{CX} \\ \boldsymbol{\delta}_{CY} \end{vmatrix} = \begin{vmatrix} -0.8112 \\ -1.398 \end{vmatrix}$$

The change in length and the resulting change in force in each member is:

$$\boldsymbol{\delta}_A = 2236 - \sqrt{(2000 - 0.8112)^2 + (1000 + 1.398)^2}$$

$= 0.1000$ mm

$$F_{CA} = \frac{\boldsymbol{\delta}_{CA}\, A_{CA}\, E_{CA}}{L_{CA}} = 0.3577\ kN \quad \text{Compression}$$

$$\boldsymbol{\delta}_{CB} = 2236 - \sqrt{(2000 - 0.8112)^2 + (1000 + 1.398)^2} = 1.350 \text{ mm}$$

$$F_{CB} = \frac{\boldsymbol{\delta}_{CB}\, A_{CB}\, E_{CB}}{L_{CB}} = 4.831\ kN \quad \text{Compression}$$

$$\boldsymbol{\delta}_{CD} = 2000 - \sqrt{(2000 - 0.8112)^2 + (1.398)^2} = 0.8117 \text{ mm}$$

$$F_{CD} = \frac{\boldsymbol{\delta}_{CD}\, A_{CD}\, E_{CD}}{L_{CD}} = 3.2468\ kN \quad \text{Tension}$$

Checking the change in member forces at Joint C:

$$F_Y = \cos \propto_{CA} P_{CA} + \cos \propto_{CB} P_{CB} + \cos \propto_{CD} P_{CD}$$

$= -0.8944(-0.3577) - 0.8944(-4.831) + 1.0(3.246) = 7.889$ kN

$$F_Y = \sin\alpha_{CA}P_{CA} + \sin\alpha_{CB}P_{CB} + \sin\alpha_{CD}P_{CD} \qquad (5.5.1A\text{-}6)$$

$$= 0.4472(-0.3577) - 0.4472(-4.831) + 0.0(3.246) = 2.000 \text{ kN}$$

The change in member forces matches the original vector of prestress and applied load at joint C. The system is in equilibrium. The resulting prestress in each member is:

$F_{CA} = 10.0 - 0.358 = 9.642$ kN (5.5.1A-7)
$F_{CB} = 10.0 - 4.831 = 5.169$ kN (5.5.1A-8)
$F_{CD} = 10.0 + 3.247 = 13.247$ kN (5.5.1A-9)

5.5.1.B Non-Linear Stiffness Analysis

In the design of tensioned fabric structures the geometry is generally selected to conform to a specified prestress. As in the preceding example, the initial shape will generally not be in equilibrium ($\boldsymbol{P} \neq \boldsymbol{K}\ \boldsymbol{\delta}$). Rather than solving for the change in member forces due to an unbalanced load, form finding requires solving for the configuration where the specified prestress and applied loads are in equilibrium.

Form finding is equivalent to identifying the funicular polygon for the specified forces. The solution to this problem is independent of the stiffness characteristics of the membrane materials. Unlike the solution for displaced shape in the previous example, identifying the appropriate prestressed configuration is usually a geometrically non-linear problem requiring an iterative solution strategy.

Consider the previous example. The calculated displacement is generally in the direction of the equilibrium configuration. The deformed shape could be used as the starting geometry for a subsequent analysis. The results of that analysis could then be used as the starting geometry for a subsequent analysis. This process will eventually converge at the desired prestress configuration.

A variety of techniques have been developed to accelerate identification of the solution for this type of problem. The analysis strategies generally use intermediate solutions to predict a solution. That solution then becomes an intermediate solution used to predict the next solution. The process is continued until answers are within an acceptable tolerance.

If the calculated deflections are scaled up (or the stiffness of the material is relaxed), the resulting deformed shape will probably be a better approximation of the ideal prestress configuration. However, a modest scaling will only slightly accelerate identifying the solution. If the scaling is too large it will overshoot the ideal configuration. In this case the configurations investigated may oscillate around the answer with increasing divergence.

For the previous example, if the displacements are scaled by 500 and used as a starting configuration for the iteration, the results will be:

The starting position for point C would be:

$X_C = 2000 - 406 = 1594$
$Y_C = 0 - 699 = -699$

For this starting configuration:

$$\boldsymbol{P} = \begin{vmatrix} -7.066 \\ 0.647 \end{vmatrix} \qquad \text{(ref 5.5.1A-1)}$$

Analyzing as before, the displacements are:

$$\begin{vmatrix} \delta_{CX} \\ \delta_{CY} \end{vmatrix} = \begin{vmatrix} -0.754 \\ -0.274 \end{vmatrix}$$

The resulting prestress in each member is:

$F_{CA} = 10.0 - 1.09 = 8.91$ kN (ref 5.5.1A-7)
$F_{CB} = 10.0 - 3.92 = 6.08$ kN (ref 5.5.1A-8)
$F_{CD} = 10.0 + 2.57 = 12.57$ kN (ref 5.5.1A-9)

Scaling the displacements by 500, the revised estimate for point C is:

$X_C = 2000 - 406 - 379 = 1215$
$Y_C = 0 - 699 - 137 = - 836$

For this configuration:

$$\boldsymbol{P} = \begin{vmatrix} -5.851 \\ 2.127 \end{vmatrix} \qquad \text{(ref 5.5.1A-1)}$$

The resulting displacements are:

$$\begin{vmatrix} \delta_{CX} \\ \delta_{CY} \end{vmatrix} = \begin{vmatrix} -0.579 \\ -0.731 \end{vmatrix}$$

The resulting prestress in each member is:

$F_{CA} = 10.0 - 3.38 = 6.62$ kN (ref 5.5.1A-7)
$F_{CB} = 10.0 + 3.11 = 13.11$ kN (ref 5.5.1A-8)
$F_{CD} = 10.0 + 0.95 = 10.95$ kN (ref 5.5.1A-9)

Notice that the X direction appears to continue to deflect in the same direction while the Y direction deflection is oscillating. For the next estimate, scale the X deflection by 500 and the Y deflection by 100. The new estimate for point C is:

$X_C = 2000 - 406 - 379 - 290 = 925$
$Y_C = 0 - 699 - 137 + 73 = -763$

For this configuration:

$$\boldsymbol{P} = \begin{vmatrix} -4.627 \\ 1.964 \end{vmatrix} \qquad \text{(ref 5.5.1A-1)}$$

The resulting displacements are:

$$\begin{vmatrix} \delta_{CX} \\ \delta_{CY} \end{vmatrix} = \begin{vmatrix} -0.471 \\ -0.632 \end{vmatrix}$$

The resulting prestress in each member is:

$F_{CA} = 10.0 - 3.13 = 6.87$ kN (ref 5.5.1A-7)
$F_{CB} = 10.0 - 2.51 = 7.49$ kN (ref 5.5.1A-8)
$F_{CD} = 10.0 + 0.77 = 10.77$ kN (ref 5.5.1A-9)

Notice that the unbalanced force in the X direction has remained in the same direction and of nearly the same magnitude. For the next estimate, scale the X deflection by 1000 and the Y direction by 100. The new estimate for point C is:

$X_C = 2000 - 406 - 379 - 290 - 471 = 454$
$Y_C = 0 - 699 - 137 + 73 + 63 = -700$

For this configuration:

$$\boldsymbol{P} = \begin{vmatrix} -1.112 \\ 0.212 \end{vmatrix} \qquad \text{(ref 5.5.1A-1)}$$

The resulting displacements are:

$$\begin{vmatrix} \delta_{CX} \\ \delta_{CY} \end{vmatrix} = \begin{vmatrix} -0.148 \\ -0.126 \end{vmatrix}$$

The resulting prestress in each member is:

$F_{CA} = 10.0 - 0.73 = 9.27$ kN (ref 5.5.1A-7)
$F_{CB} = 10.0 - 0.79 = 9.21$ kN (ref 5.5.1A-8)
$F_{CD} = 10.0 + 0.27 = 10.27$ kN (ref 5.5.1A-9)

The computed prestresses are within 7% of the target prestress. The answer is converging. For the next estimate, scale the X deflection by 500 and continue to scale the Y deflection by 100. The new estimate for point C is:

$X_C = 2000 - 406 - 379 - 290 - 471 - 74 = 380$
$Y_C = 0 - 699 - 137 + 73 + 63 + 13 = -687$

For this configuration:

$$\boldsymbol{P} = \begin{vmatrix} -0.0915 \\ 0.4667 \end{vmatrix} \qquad \text{(ref 5.5.1A-1)}$$

The resulting displacements are:

$$\begin{vmatrix} \delta_{CX} \\ \delta_{CY} \end{vmatrix} = \begin{vmatrix} -0.031 \\ -0.063 \end{vmatrix}$$

The resulting prestress in each member is:

$F_{CA} = 10.0 + 0.32 = 10.32$ kN (ref 5.5.1A-7)
$F_{CB} = 10.0 - 0.26 = 9.74$ kN (ref 5.5.1A-8)
$F_{CD} = 10.0 - 0.04 = 9.96$ kN (ref 5.5.1A-9)

This process is converging toward the equilibrium prestress configuration. After five cycles, the computed prestress is within 3% of the desired prestress. The primary challenge in developing and using a stiffness approach lies in efficiently predicting the ideal configuration from information derived in previous estimates.

5.5.2 Force Density

The force density method is an analytic technique to linearize the form finding equations. Although it may be used in the analysis of applied loads, its primary use is in identifying the equilibrium shape associated with a specified prestress.

This method allows designers to find shapes in equilibrium with a given topology, support locations and a set of force density ratios (cable force divided by cable length). The method is independent of the initial location of the free joints. The method considers each element framing into each joint. Different force density ratios produce different geometries, all of which are in equilibrium. A certain amount of guesswork is required to identify the desired equilibrium shape. With some practice, obtaining the desired shape is easy. The method is numerically robust and has a physical feel. The method can be used to find the equilibrium shape for determinate, indeterminate, stable and unstable structures.

If the force densities are positive, the system of equations is positive, definite, and always has a solution. Once the equilibrium coordinates are obtained, the length and force of each element can be found. If the stress-strain relationship for an element is known, the deformed length and element force can be used to determine the unstressed length.

The higher the force density ratio, the shorter the element for a constant force. The higher the force density ratio, the larger the force is in an element with a constant length. The force density ratio can be visualized as the rubber band constant. The larger the ratio, the stronger the rubber band linking the joints. When the force densities for all elements at a joint are equal and uniformly distributed around the joint, minimal surfaces are generated.

Once the prestressed equilibrium shape is obtained, deformed shapes for different loading conditions can be found. Each time the loading changes, the equilibrium geometry changes and a new solution must be found. The force density solution to applied loads is non-linear, requiring iteration. Each successive iteration is performed imposing a constant length of cable. The force densities are then adjusted as necessary. Alternate non-linear solution strategies may also be used to analyze the behavior of applied loads.

In the example shown in Figure 5-13, the force density method is applied to a simple bar network with two unknowns. The equilibrium equations are uncoupled in each direction. The example shows the resolution for each of the unknown coordinates. While tensioned fabric structures may be modeled using bar networks, they are usually modeled using two dimensional elements.

Given:

A(0,1000)
B(0,-1000)
D(4000,0)
$P_{CX}=0.0$
$P_{CY}=2.0$

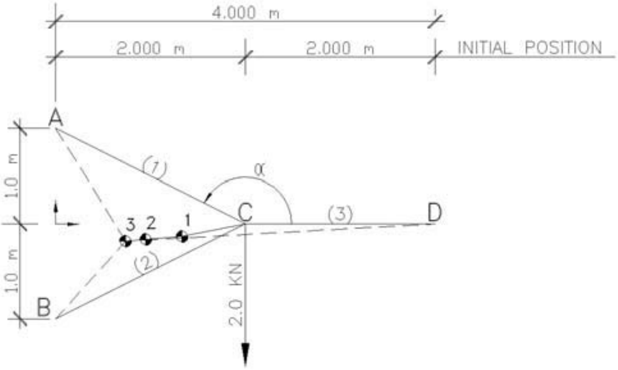

Figure 5-14
Force Density Example
(Drawing by the author)

The force density can be selected as any convenient value. The value can be the same for all elements or it can vary. In meshes with no applied load, 1.0 is often chosen for the initial value. In this example, with an applied load, the initial value will be chosen to be representative of the force density anticipated.

$q_i = F_i/L_i = 10.0/2000 = 0.005$ for all I (5.5.2-1)

Find:

$C\ (X_C, Y_C)$
F_i For all bars

Solution:

$\sum F_X = 0$ For node C (ref 5.1.3-1)
$\Rightarrow F_1(X_A-X_C)/L_1 + F_2(X_B-X_C)/L_2 + F_3(X_D-X_C)/L_3 = 0$

$\sum F_Y = 0$ For node C (ref 5.1.3-2)
$\Rightarrow F_1(Y_A-Y_C)/L_1 + F_2(Y_B-Y_C)/L_2 + F_3(Y_D-Y_C)/L_3 - P_C = 0$

Note: The equations in the X-direction are uncoupled from the equations in the Y-direction.

Let $F_i/L_i = g_i$ where g_i is the Force Density (5.5.2-2)

Rearranging:

$$-(g_1+g_2+g_3)X_C + g_1X_A + g_2X_B + g_3X_D - P_{CX} = 0$$

$$-(g_1+g_2+g_3)Y_C + g_1Y_A + g_2Y_B + g_3Y_D - P_{CY} = 0$$

$$X_C = \frac{g_1 X_A + g_2 X_B + g_3 X_D - P_{CX}}{g_1 + g_2 + g_3} \qquad (5.5.2\text{-}3)$$

$$= \frac{0.005(0.0) + 0.005(0.0) + 0.005(4000) - 0.0}{(0.005 + 0.005 + 0.005)} = 1333$$

$$Y_C = \frac{g_1 Y_A + g_2 Y_B + g_3 Y_D - P_{CY}}{g_1 + g_2 + g_3} \qquad (5.5.2\text{-}4)$$

$$= \frac{0.005(1000) + 0.005(-1000) + 0.005(0.0) - 2.0}{(0.005 + 0.005 + 0.005)} = -133$$

Check for equilibrium, recalling $F_i = g_i L_i$ (ref 5.5.2-2)

$L_1 = \sqrt{1333^2 + 1133^2} = 1749$

$F_1 = 0.005(1749) = 8.75$ kN
$F_{1X} = 6.67$ kN
$F_{1Y} = 5.67$ kN

$L_2 = \sqrt{1333^2 + 867^2} = 1590$

$F_2 = 0.005(1590) = 7.95$ kN
$F_{2X} = 6.67$kKN
$F_{2Y} = 4.34$ kN

$L_3 = \sqrt{2667^2 + 133^2} = 2670$

$F_3 = 0.005(2670) = 13.35$ kN
$F_{3X} = 13.34$ kN
$F_{3Y} = 0.665$ kN

At the new location for node C:

$\sum F_X = -6.67 - 6.67 + 13.34 = 0.0$ (ref 5.1.3-1)
$\sum F_Y = 5.67 - 4.34 + 0.67 = 2.0$ (ref 5.3.1-2)

An equilibrium configuration has been identified. However, the forces in the bars, 8.75, 7.95 and 13.3 are only moderately close to the targeted 10.0. The force density value can be modified to find another equilibrium condition.

For the next iteration try:

$g_1 = 10.0/1749 = 0.00572$ (ref 5.5.2-2)
$g_2 = 10.0/1590 = 0.00629$
$g_3 = 10.0/2670 = 0.00375$

$$X_C = \frac{g_1 X_A + g_2 X_B + g_3 X_D - P_{CX}}{g_1 + g_2 + g_3}$$ (ref 5.5.2-3)

$$= \frac{0.00572(0.0) + 0.00629(0.0) + 0.00375(4000) - 0.0}{(0.00572 + 0.00629 + 0.00375)} = 951$$

$$Y_C = \frac{g_1 Y_A + g_2 Y_B + g_3 Y_D - P_{CY}}{g_1 + g_2 + g_3}$$ (ref 5.5.2-4)

$$= \frac{0.00572(1000) + 0.00629(-1000) + 0.00375(0.0) - 2.0}{(0.00572 + 0.00629 + 0.00375)} = -163$$

Check for equilibrium, recalling $F_i = g_i L_i$ (ref 5.5.2-2)

$L_1 = \sqrt{951^2 + 1163^2} = 1502$

$F_1 = 0.00572(1502) = 8.59$ kN
$F_{1X} = 5.44$ kN
$F_{1Y} = 6.65$ kN

$L_2 = \sqrt{951^2 + 837^2} = 1267$

$F_2 = 0.06295(1267) = 7.97$ kN
$F_{2X} = 5.98$ kN
$F_{2Y} = 5.26$ kN

$L_3 = \sqrt{3049^2 + 163^2} = 3053$

$F_3 = 0.00374(3053) = 11.44$ kN
$F_{3X} = 11.42$ kN
$F_{3Y} = 0.61$ kN

At the new location for node C:

$\sum F_X = -5.44 - 5.98 + 11.24 = 0.0$ (ref 5.1.3-1)
$\sum F_Y = 6.65 - 5.26 + 0.61 = 2.0$ (ref 5.1.3-2)

An equilibrium configuration has been identified. The bar forces are closer to the target of 10.0; however, additional accuracy is desired. One way to select a force density factor to increase the force in members 1 & 2 and decrease the force in member 3 is to scale the previously used force density values by the desired change in the resulting member forces.

For the next iteration try:

$g_1 = 0.00572(10.0/8.59) = 0.00666$ (ref 5.5.2-2)
$g_2 = 0.00629(10.0/7.97) = 0.00789$
$g_3 = 0.00375(10.0/11.44) = 0.00327$

$$X_C = \frac{g_1X_A + g_2X_B + g_3X_D - P_{CX}}{g_1 + g_2 + g_3} \qquad \text{(ref 5.5.2-3)}$$

$$= \frac{0.00666(0.0) + 0.00789(0.0) + 0.00327(4000) - 0.0}{(0.00666 + 0.00789 + 0.00327)} = 735$$

$$Y_C = \frac{g_1Y_A + g_2Y_B + g_3Y_D - P_{CY}}{g_1 + g_2 + g_3} \qquad \text{(ref 5.5.2-4)}$$

$$= \frac{0.00666(1000) + 0.00789(-1000) + 0.00327(0.0) - 2.0}{(0.00666 + 0.00789 + 0.00327)} = -182$$

Check for equilibrium, recalling $F_i = g_iL_i$ (ref 5.5.2-2)

$L_1 = \sqrt{735^2 + 1182^2} = 1392$
$F_1 = 0.00666(1392) = 9.26$ kN
$F_{1X} = 4.89$ kN
$F_{1Y} = 7.86$ kN

$L_2 = \sqrt{735^2 + 818^2} = 1100$
$F_2 = 0.0789(1100) = 8.68$ kN
$F_{2X} = 5.80$ kN
$F_{2Y} = 6.46$ kN
$L_3 = \sqrt{3265^2 + 182^2} = 3270$
$F_3 = 0.00327(3270) = 10.71$ kN
$F_{3X} = 10.69$ kN
$F_{3Y} = 0.62$ kN

At the new location for node C:

$\sum F_X = -4.89 - 5.80 + 10.69 = 0.0$ (ref 5.1.3-1)
$\sum F_Y = 7.86 - 6.46 + 0.60 = 2.0$ (ref 5.1.3-2)

Another equilibrium configuration has been identified. Again the force density factor for members 1 & 2 needs to be increased further and the force density factor for member 3 decreased further to improve on the solution.

5.5.3. Dynamic Relaxation

Dynamic relaxation methods solve the geometrically non-linear problem of form finding by equating it to a dynamic problem. The dynamic problem is then solved using established principles of dynamic analysis. This generally requires the analyst to generate mass and damping characteristics which respond appropriately to analytically induced vibration.

The forces at each node can be investigated at each time step in the analysis. Unbalanced internal forces can be attributed to the acceleration of a fictitious mass at that node. As the motion of the structure diminishes, the configuration of the surface will come to rest in the prestressed equilibrium shape. The technique was initially developed in Great Britain by A. S. Day and others. (references 7, 8 and 9). It provides the analytic basis for several well developed computer programs.

The general equation for motion is:

$$M_i \ddot{y} + K_i y + C_i \dot{y} = F(t)_i \tag{5.5.3-1}$$

Where:

M_i = Mass at each node
K_i = Stiffness at each node
C_i = Coefficient of viscous damping at each node
$F(t)_i$ = Applied force at each node
t = Time
y = Displacement
$\dot{y}$ = Velocity
$\ddot{y}$ = Acceleration

To evaluate the accuracy of a solution, the sum of forces from the members and the applied load at each node is investigated. If the sum of the internal member forces does not balance the applied load, the difference will be considered a residual force.

$$R_i = \sum F_i - P_i \tag{5.5.3-2}$$

where:

R_i = Residual force at a node in the direction being considered
$\sum F_i$ = Sum of the internal member forces in the direction being considered
P_i = Applied load at the node in the direction being considered

Any residual force will be attributed to the dynamic behavior at the node

$$R_i = M_i \ddot{y} + C_i \dot{y} \tag{5.5.3-3}$$

An acceptable solution will be declared when the residual forces are sufficiently small. The solution for the residual force may be approximated by using finite differences:

$$R_{(t+½)} = \frac{M}{\Delta t}(V_{(t+1)} - V_t) + \frac{C}{2}(V_{(t+1)} - V_t) \tag{5.5.3-4}$$

where

t = The last time step considered

Δt = The time step increment

V_t = The velocity of the mass at the node in the direction being investigated at the beginning of the time increment

The previous equation may be rearranged to find the velocity of the next time step.

$$V_{(t+1)} = V_t \frac{\left|\frac{M}{\Delta t} \quad \frac{-C}{2}\right|}{\left|\frac{M}{\Delta t} \quad \frac{+C}{2}\right|} + \frac{R_{(t+1/2)}}{\left|\frac{M}{\Delta t} \quad \frac{+C}{2}\right|} \tag{5.5.3-5}$$

Recalling that average velocity = distance/time

$$V_{(t)} = \frac{u_{(t+1/2)} - u_{(t-1/2)}}{\Delta t} \tag{5.5.3-6}$$

where

u_t = The position of a node at time t

To find the equilibrium prestressed configuration:

1) Solve for the member forces, F_i, using equation 5.5.3-1.
2) Identify the residual forces, R_i, using equation 5.5.3-2.
3) Check the magnitude of the residual forces against the acceptable criteria.
4) Identify the next configuration to be investigated using 5.5.3-5 and 5.5.3-6.
5) Return to step 1 and repeat.

If the procedure is being used to evaluate the effect of a load applied to a specified geometry, the stiffness will be defined by the member section and material properties. For a bar element, the force at each increment will be:

$$F_i = \frac{\delta L_i A_i E_i}{L_i} \qquad (5.5.3\text{-}7)$$

However, in form finding, the member forces are generally known with the configuration being unknown. In this case the stiffness is established by the member force and current configuration.

The time increment, mass and damping are fictitious. Their values are selected for analytic convenience. Typically 1 is used as a time increment. The mass must be small enough to capture the vibration cycle in the analysis. The viscous damping coefficient needs to be selected to ensure convergence of the solution.

Selecting a time increment of 1, a mass of 0.1 and no damping, evaluate the vertical displacement of Figure 5-15.

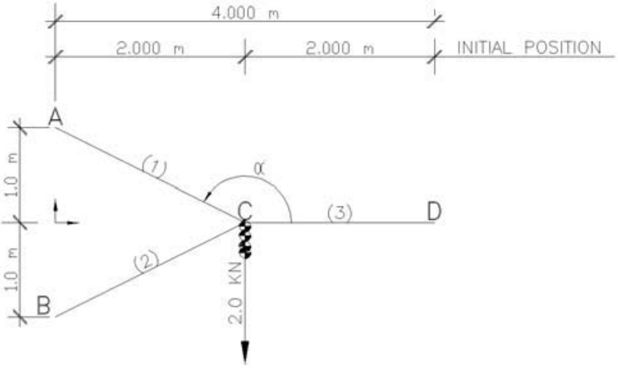

Figure 5-15
Dynamic Relaxation Example, Single Degree of Freedom
(Drawing by the author)

The positions of points A, B, & D are determined
The applied load P_{CY} is given
A target prestress, F_i, has been set
Assume C_X is fixed at 2000, Solve for C_Y (Single degree of freedom example)

The internal stiffness in the Y direction is the sum of the member forces times their respective Y components:

$K_Y = F_1 * K_{1Y} + F_2 * K_{2Y} + F_3 * K_{3Y}$

$F_1 = F_2 = F_3 = 10$ kN

$$K_{1Y} = \frac{1000 + Y_C}{\sqrt{2000^2 + (1000 + Y_C)^2}}$$

$$K_{2Y} = \frac{1000 - Y_C}{\sqrt{2000^2 + (1000 - Y_C)^2}}$$

$$K_{3Y} = \frac{Y_C}{\sqrt{2000^2 + {Y_C}^2}}$$

The external applied load is:

$F_{CY}(t) = -2.0$ kN

Initially the system is assumed to be at rest. The time increment, initial y coordinate and external applied load are noted. Next, the stiffness of each member is calculated. The unbalance force is noted and the initial acceleration is calculated. Recalling:

$$\ddot{y} = \frac{F(t) - K}{M} \qquad (5.5.3\text{-}8)$$

The displacement at the next time increment is then calculated. The displacement is generally calculated by noting:

$$Y^{(t+1)} = Y^{(t)} + \dot{y}_{AVERAGE}\Delta t \qquad (5.5.3\text{-}9)$$

and

$$\dot{y}_{AVERAGE} = \frac{Y^{(t)} - Y^{(t-1)}}{\Delta t} + \ddot{y}^{(t)}\Delta t \qquad (5.5.3\text{-}10)$$

Can be rearranged to:

$$Y^{(t+1)} = 2Y^{(t)} - Y^{(t-1)} + \ddot{y}^{(t)}(\Delta t)^2 \qquad (5.5.3\text{-}11)$$

Equation 5.5.3-11 requires knowing the current acceleration and the displacement at the last two time increments. As only one previous displacement is known on the first cycle, another method must be used to determine the first displacement. For the first displacement use:

$$Y^{(1)} = Y^{(0)} + 1/2\, \ddot{y}^{(0)}(\Delta t)^2 \qquad (5.5.3\text{-}12)$$

Neglecting damping, the first 20 iterations are:

M_Y= 0.1

C_Y= 0.0

t	Y	$F_Y(t)$	F_1K_{1Y}	F_2K_{2Y}	F_3K_{3Y}	$\sum FK_Y$	$\ddot{Y}$
0.0	0.0	-2.00	-4.472	4.472	0.000	0.000	-20.000
1.0	-10.0	-2.00	-4.508	4.436	-0.050	-0.122	-18.784
2.0	-38.8	-2.00	-4.609	4.332	-0.194	-0.471	-15.286
3.0	-82.9	-2.00	-4.761	4.168	-0.414	-1.007	-9.932
4.0	-136.9	-2.00	-4.942	3.962	-0.683	-1.662	-3.380
5.0	-194.2	-2.00	-5.127	3.737	-0.967	-2.356	3.565
6.0	-248.1	-2.00	-5.294	3.519	-1.231	-3.006	10.057
7.0	-291.8	-2.00	-5.426	3.338	-1.444	-3.532	15.317
8.0	-320.3	-2.00	-5.509	3.218	-1.581	-3.872	18.724
9.0	-330.0	-2.00	-5.537	3.177	-1.628	-3.989	19.887
10.0	-319.8	-2.00	-5.508	3.220	-1.579	-3.867	18.671
11.0	-291.0	-2.00	-5.423	3.341	-1.440	-3.522	15.216
12.0	-246.9	-2.00	-5.291	3.524	-1.225	-2.992	9.921
13.0	-192.9	-2.00	-5.123	3.742	-0.960	-2.341	3.409
14.0	-135.6	-2.00	-4.937	3.967	-0.676	-1.646	-3.537
15.0	-81.7	-2.00	-4.757	4.173	-0.408	-0.993	-10.070
16.0	-37.9	-2.00	-4.606	4.335	-0.190	-0.461	-15.388
17.0	-9.6	-2.00	-4.506	4.438	-0.048	-0.116	-18.839
18.0	0.0	-2.00	-4.472	4.472	0.000	0.000	-19.999
19.0	-10.5	-2.00	-4.509	4.435	-0.052	-0.127	-18.729
20.0	-39.6	-2.00	-4.612	4.329	-0.198	-0.482	-15.183

Reviewing the displacements and accelerations shows that the first 20 time steps have covered one vibration cycle. The displacements of the first half cycle are shown in Figure 5-16. Without damping, the analysis will continue to cycle without converging. As the displacements and acceleration have already been calculated, the velocity can be calculated and viscous damping added to facilitate convergence.

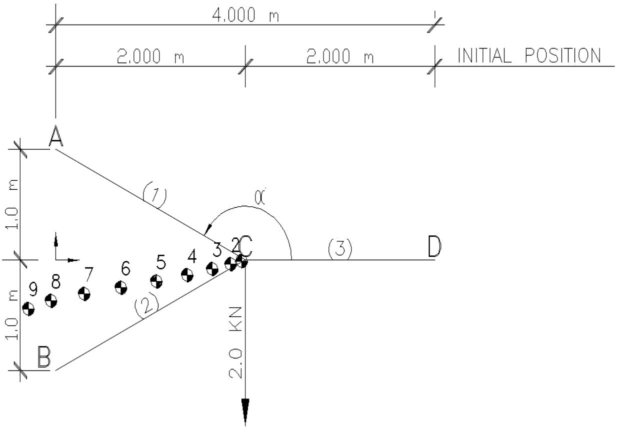

Figure 5-16
Dynamic Relaxation Example, Two Degrees of Freedom without Damping
(Drawing by the author)

Adding damping, the acceleration will be calculated by:

$$\ddot{Y}^{(t)} = \frac{F(t) - K - C(y^{(t)} - y^{(t-1)})/\Delta t}{M + C\Delta t/2} \qquad (5.5.3\text{-}13)$$

Adding a damping coefficient of 0.04, the first 20 iterations are:

$M_Y =$ 0.1

$C_Y =$ 0.04

t	Y	F_Y (t)	F_1K_{1Y}	F_2K_{2Y}	F_3K_{3Y}	$\sum FK_Y$	$\ddot{Y}$
0.0	0.0	-2.00	-4.472	4.472	0.000	0.000	-20.000
1.0	-10.0	-2.00	-4.508	4.436	-0.050	-0.122	-12.320
2.0	-32.3	-2.00	-4.587	4.355	-0.162	-0.393	-5.953
3.0	-60.6	-2.00	-4.685	4.251	-0.303	-0.736	-1.106
4.0	-90.0	-2.00	-4.785	4.142	-0.449	-1.093	2.236
5.0	-117.1	-2.00	-4.876	4.038	-0.585	-1.423	4.236
6.0	-140.0	-2.00	-4.952	3.950	-0.698	-1.700	5.138
7.0	-157.8	-2.00	-5.010	3.881	-0.787	-1.916	5.219
8.0	-170.3	-2.00	-5.051	3.832	-0.849	-2.067	4.745
9.0	-178.1	-2.00	-5.076	3.801	-0.887	-2.162	3.950
10.0	-182.0	-2.00	-5.088	3.786	-0.906	-2.208	3.022
11.0	-182.8	-2.00	-5.091	3.782	-0.910	-2.219	2.098
12.0	-181.6	-2.00	-5.086	3.787	-0.904	-2.203	1.271
13.0	-179.0	-2.00	-5.078	3.797	-0.892	-2.173	0.592
14.0	-175.9	-2.00	-5.068	3.810	-0.876	-2.135	0.079
15.0	-172.7	-2.00	-5.058	3.822	-0.860	-2.096	-0.271
16.0	-169.7	-2.00	-5.049	3.834	-0.846	-2.060	-0.477
17.0	-167.3	-2.00	-5.041	3.844	-0.834	-2.031	-0.566
18.0	-165.4	-2.00	-5.035	3.851	-0.824	-2.008	-0.569
19.0	-164.1	-2.00	-5.030	3.856	-0.818	-1.992	-0.513
20.0	-163.3	-2.00	-5.028	3.860	-0.814	-1.982	-0.424

The displacements after 5, 10, 15 and 20 cycles are shown in Figure 5-17. By adding damping the solution is converging to the prestress equilibrium position.

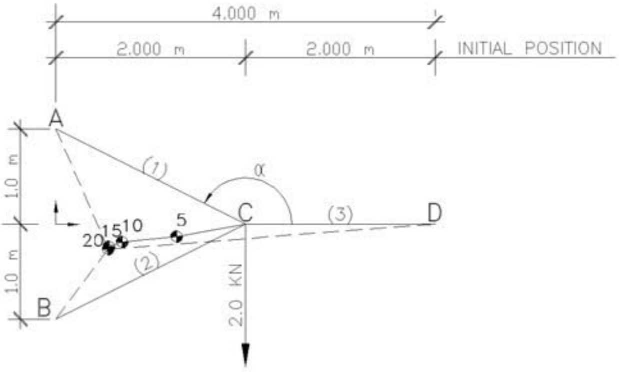

Figure 5-17
Dynamic Relaxation Example, Two Degrees of Freedom with Damping
(Drawing by the author)

An alternative to using viscous damping is to introduce kinetic damping. For this process the position of minimum acceleration is identified. The position of minimum acceleration is the position of maximum velocity and kinetic energy. The displacement at the position of maximum kinetic energy can be calculated and used as the starting position for another cycle of analysis. In the undamped analysis the acceleration was 0.0 between time cycles 4 & 5. The analysis could have been stopped there and a new starting position determined:

$$Y_{NEXT} = -136.9 - \frac{3.380}{3.380+3.565+12.73} * (194.2-136.9) = -164.7$$

Note in this example of a single degree of freedom system -164.7 is an excellent estimate of the equilibrium positions where:

$$\sum FK_Y = F_1*K_{1Y} + F_2*K_{2Y} + F_3 * K_{3Y}$$

$$= -5.032 + 3.854 - 0.821 = -1.999 \text{ balances the applied load of } 2.0$$

Adding additional degrees of freedom simply requires more analysis. Solving for both X_C & Y_C requires modifying the stiffness to:

$$K_X = F_1*K_{1X} + F_2*K_{2X} + F_3 * K_{3X}$$

$$F_1 = F_2 = F_3 = 10 \text{ kN}$$

$$K_{1X} = \frac{-X_C}{\sqrt{X_C{}^2 + (1000 + Y_C)^2}}$$

$$K_{2X} = \frac{-X_C}{\sqrt{X_C{}^2 + (-1000 - Y_C)^2}}$$

$$K_{3X} = \frac{4000 - X_C}{\sqrt{(4000 - X_C)^2 + Y_C{}^2}}$$

$$K_Y = F_1*K_{1Y} + F_2*K_{2Y} + F_3 * K_{3Y}$$

$$F_1 = F_2 = F_3 = 10 \text{ kN}$$

$$K_{1Y} = \frac{1000 + Y_C}{\sqrt{X_C{}^2 + (1000 + Y_C)^2}}$$

$$K_{2Y} = \frac{-1000 - Y_C}{\sqrt{X_C{}^2 + (-1000 - Y_C)^2}}$$

$$K_{3Y} = \frac{Y_C}{\sqrt{(4000 - X_C)^2 + Y_C{}^2}}$$

The external applied loads are:
$F_{CX}(t) =$ 0,0
$F_{CY}(t) =$ -2.0 kN

Using a mass of 0.1 without viscous damping, the first 10 iterations are:

M_X=	0.1
M_Y=	0.1
C_X=	0.0
C_Y=	0.0

t	X	$F_x(t)$	F_1K_{1X}	F_2K_{2X}	F_3K_{3X}	$\sum FK_X$	$\ddot{X}$
0.0	2000.0	0.00	8.944	8.944	-10.000	7.889	-78.885
1.0	1960.6	0.00	8.890	8.926	-10.000	7.816	-78.163
2.0	1843.0	0.00	8.711	8.866	-9.998	7.580	-75.796
3.0	1649.5	0.00	8.360	8.740	-9.994	7.106	-71.058
4.0	1385.1	0.00	7.729	8.488	-9.986	6.230	-62.304
5.0	1058.3	0.00	6.628	7.962	-9.978	4.612	-46.116
6.0	685.4	0.00	4.799	6.762	-9.971	1.590	-15.897
7.0	296.7	0.00	2.210	3.945	-9.965	-3.810	38.100
8.0	-54.0	0.00	-0.394	-0.855	-9.958	-11.207	112.074
9.0	-292.6	0.00	-1.987	-4.653	-9.947	-16.587	165.867
10.0	-365.4	0.00	-2.343	-6.025	-9.931	-18.298	182.984

t	Y	$F_Y(t)$	F_1K_{1Y}	F_2K_{2Y}	F_3K_{3Y}	$\sum FK_Y$	$\ddot{Y}$
0.0	0.0	-2.00	-4.472	4.472	0.000	0.000	-20.000
1.0	-10.0	-2.00	-4.580	4.508	-0.049	-0.121	-18.789
2.0	-38.8	-2.00	-4.910	4.624	-0.180	-0.466	-15.344
3.0	-82.9	-2.00	-5.488	4.859	-0.353	-0.981	-10.185
4.0	-137.2	-2.00	-6.346	5.287	-0.524	-1.583	-4.173
5.0	-195.7	-2.00	-7.488	6.051	-0.664	-2.102	1.015
6.0	-253.2	-2.00	-8.773	7.367	-0.762	-2.168	1.679
7.0	-309.0	-2.00	-9.753	9.189	-0.831	-1.395	-6.048
8.0	-370.8	-2.00	-9.992	9.963	-0.911	-0.940	-10.601
9.0	-443.3	-2.00	-9.801	8.852	-1.027	-1.976	-0.239
10.0	-516.0	-2.00	-9.722	7.982	-1.174	-2.914	9.140

Notice that the maximum kinetic energy occurred between cycles 6 & 7 in the X direction and between cycles 4 & 5 in the Y direction. The next starting position could be calculated using the maximum kinetic energy in each direction in spite of the fact that they occurred at different times.

As the mass and damping are selected for analytic convenience it is possible to use different mass and damping for each degree of freedom. To optimize the conversion rate, the mass and damping can also vary at each time increment. Using a mass of 0.08 in the X direction, a mass of 0.12 in the Y direction, a damping coefficient of 0.03 in the X direction and a damping coefficient of 0.04 in the Y direction, the first 10 iterations are:

M_X= 0.08
M_Y= 0.12
C_X= 0.03
C_Y= 0.04

t	X	Fx(t)	F_1K_{1X}	F_2K_{2X}	F_3K_{3X}	$\sum FK_X$	$\ddot{X}$
0.0	2000.0	0.00	8.944	8.944	-10.000	7.889	-98.607
1.0	1950.7	0.00	8.880	8.917	-10.000	7.798	-66.512
2.0	1834.9	0.00	8.719	8.842	-9.999	7.562	-43.024
3.0	1676.0	0.00	8.459	8.715	-9.997	7.177	-25.384
4.0	1491.8	0.00	8.087	8.525	-9.994	6.617	-11.481
5.0	1296.1	0.00	7.588	8.251	-9.991	5.848	0.245
6.0	1100.7	0.00	6.954	7.870	-9.989	4.836	10.818
7.0	916.0	0.00	6.202	7.365	-9.987	3.580	20.625
8.0	752.0	0.00	5.385	6.744	-9.985	2.144	29.227
9.0	617.2	0.00	4.596	6.073	-9.984	0.686	35.348
10.0	517.8	0.00	3.941	5.469	-9.982	-0.572	37.422

t	Y	$F_Y(t)$	F_1K_{1Y}	F_2K_{2Y}	F_3K_{3Y}	$\sum FK_Y$	$\ddot{Y}$
0.0	0.0	-2.00	-4.472	4.472	0.000	0.000	-20.000
1.0	-10.0	-2.00	-4.598	4.526	-0.049	-0.121	-10.564
2.0	-30.6	-2.00	-4.897	4.671	-0.141	-0.367	-5.791
3.0	-56.9	-2.00	-5.334	4.904	-0.245	-0.675	-1.934
4.0	-85.2	-2.00	-5.883	5.227	-0.340	-0.995	0.901
5.0	-112.6	-2.00	-6.513	5.649	-0.416	-1.280	2.683
6.0	-137.3	-2.00	-7.186	6.169	-0.473	-1.490	3.416
7.0	-158.6	-2.00	-7.844	6.765	-0.514	-1.593	3.177
8.0	-176.7	-2.00	-8.426	7.384	-0.543	-1.586	2.217
9.0	-192.6	-2.00	-8.881	7.945	-0.568	-1.505	1.005
10.0	-207.5	-2.00	-9.191	8.372	-0.595	-1.414	0.067

The method of dynamic relaxation is extremely tolerant of poor initial form estimates. By associating unbalanced forces with dynamic behavior, nodes can move out of a configuration which would appear singular or unstable in a stiffness approach. The primary challenges in implementing the method are associated with selecting appropriate mass, damping, and time step increments. If the dynamic properties are not appropriately defined, the dynamic analysis will converge very slowly or may be unstable and not converge.

Chapter 6
Load Analysis

6.1 Codes and Standards

Although the materials used in tensile membrane structures and their behaviors under applied loads follow well established principles of mechanics, they are often outside the realm typically considered for building structures. ASCE Standard 17-96, *Air Supported Structures*, ASCE Standard 19-96, *Structural Applications of Steel Cables for Buildings* and ASCE Standard 55-10, *Tensile Membrane Structures* contain useful information relating to the design of tensile membrane structures. Behavior characteristics which are critical to understanding and evaluating tensile membrane structures under applied loads are considered in this chapter.

6.2 Non-linear Response to Applied Loads

Unlike structures with significant shear and flexural stiffness, the geometric changes in the form of a tensile structure under applied loading are often significant and must be included in the analysis. The influence of geometric deformation is generally non-linear. Consequently, superposition of the results from various load cases is usually not valid in the analysis of tensile membrane structures.

For example:

Consider the beam in Figure 6-1 spanning between two supports. When a load is applied, the beam will bend as it transfers the vertical reactions of the load to the edge supports. Analyzing the beam again using the original load and the calculated deformed shape will generally not provide additional insight into the beam's behavior.

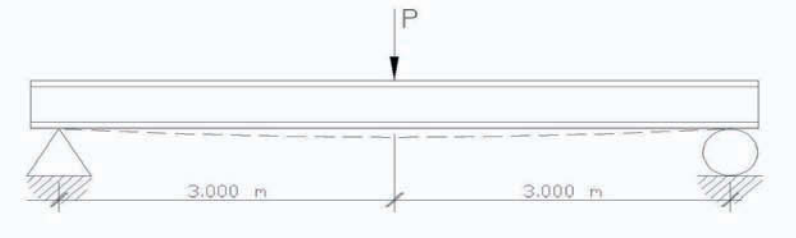

Figure 6-1
Beam
(Drawing by the author)

Given:

P = 10.0 kN (applied vertical load)
L = 6000 mm
EI=2.5 x 10^9 kN*mm^2

Solve for:

$\delta = PL^3/48EI = 18$ mm (6.2-1)

Next, consider the cable in Figure 6-2 tied between two supports. When load is applied, the cable will grow taut and deflect. A small load will result in a relatively large deflection. The deflection will not be linearly proportional to the applied load. The vertical resistance of the cable is dependent on the cable tension and deflection. Solution strategies for solving this non-linear geometric problem are considered in Chapter 5. Verifying that the correct solution has been identified can be done with linear analysis.

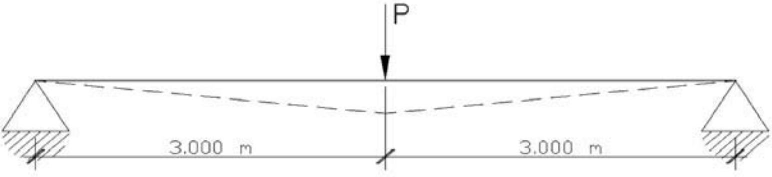

Figure 6-2
Cable
(Drawing by the author)

Given:

$P = 10.0$ kN (applied vertical load)
$L = 6000$ mm
$A = 40\ \text{mm}^2$
$E = 200\ \text{kN/mm}^2$
$T_{PRESTRESS} = 0.0$ kN

Check:

$\delta_V = 325$ mm (calculated vertical cable deflection)

Find:

T = Cable tension
T_V = Vertical component of cable tension
$L = \sqrt{3000^2 + 325^2} = 3017.6$ mm
$\delta_L = 3017.6 - 3000.0 = 17.6$ mm
$T = \delta_L AE/L = 46.81$ kN (6.2-2)
$T_V = 46.81*(325/3000) = 5.07$ kN

Next, consider the prestressed cable in Figure 6-3 anchored to the same two supports. As in the previous example, the vertical resistance of the cable is dependent on the cable tension and deflection. Prestressing the cable will result in increased cable tension and decreased deflection. Again, verifying that the correct solution has been identified can be done with linear analysis.

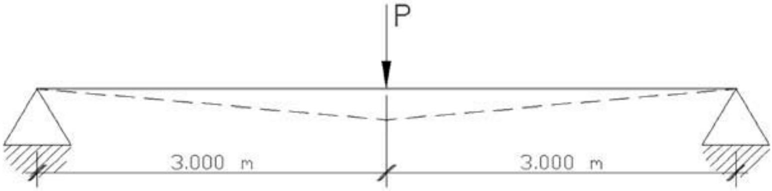

Figure 6-3
Prestressed Cable
(Drawing by the author)

Given:

$P = 10.0$ kN (applied vertical load)
$L = 6000$ mm
$A = 40\ \text{mm}^2$
$E = 200\ \text{kN/mm}^2$
$T_{PRESTRESS} = 20.0$ kN (initial cable prestress)

Check:

$\delta_V = 279$ mm (calculated vertical cable deflection)

$$L=\sqrt{3000^2+279^2} = 3012.9 \text{ mm}$$

$$\delta_L= 3012.9-3000.0 = 12.9 \text{ mm}$$

$$T= T_{PRESTRESS} + \delta_L AE/L = 20.0 + 34.52 = 54.52 \text{ kN} \qquad (6.2\text{-}3)$$

$$T_V= 54.52 * (279/3000) = 5.07 \text{ kN}$$

6.3 Wind and Snow Loads

When loads (live, wind, snow, etc.) are applied to a tensile structure, structural equilibrium is maintained by a combination of changes in the internal stresses of the constituent components and by changes in the structural geometry.

6.3.1 Wind Performance and Membrane Flutter

Wind loads will result in transient deformations in the fabric membrane. Generally this does not lead to dynamic problems so long as there is sufficient bi-axial stress in the fabric under the peak load conditions. The amplitudes of the wind deformations of the fabric surface of most tensile membrane structures are sensitive to specific load distributions. As noted in Chapter 4, Loads, wind pressure distributions for most tensioned fabric forms are quite difficult to determine from building codes and the literature. Consequently, for structures where deformation is critical or specific limits on displacement are required, wind tunnel studies may be needed to provide realistic wind pressure distributions.

The stressed membrane form subjected to wind loads should be reviewed for regions of slackness. Regions of the surface that have no stress in both of the principal directions, warp and fill, of the fabric membrane will be problematic. However, much more common is a condition of uni-axial slackness, where either the warp or the fill has no tension. Large regions of uni-axial slack fabric membrane are to be avoided as it is likely that such areas will flutter at least in the design wind. Such flutter is detrimental to fabric membranes and can result in failure.

Where large slack areas of the membrane surface are predicted in analysis, it is likely that the shape (form and prestress or both), will require modification.

6.3.2 Snow and Ponding

The design of tensile membrane roofs for applications in climates that include snow should be conceived with resistance to snow inducing ponding in mind. Where the design requires that regions of the roof surface may be subject to snow-induced ponding, evaluation of the deformed roof surface under a number of potential snow load distributions should be performed. The loads should consider the water equivalent tributary to the location in question and the drainage paths. Stability analysis of masts and other major structural elements should consider the implications of ponding induced membrane failure.

Prediction of snow-induced ponding is quite difficult and generally can only be addressed qualitatively by review and evaluation of both the deformed roof surfaces and the potential accumulation for snow and water loads in susceptible areas. The difficulty of design with respect to this issue begins with prediction of snow load distributions for unique tensile forms.

6.3.3 Characteristics of Snow Load

Understanding the weather events most likely to cause ponding problems is helpful. The maximum local load intensity is likely to result from a single snow storm event of wet heavy snow or a significant snow accumulation followed by a thaw and rain. Actual snow load distributions are typically less favorable than the uniform case and consequently the surface ponding may occur at lower overall snow loads than the Code design load (Figure 6-4).

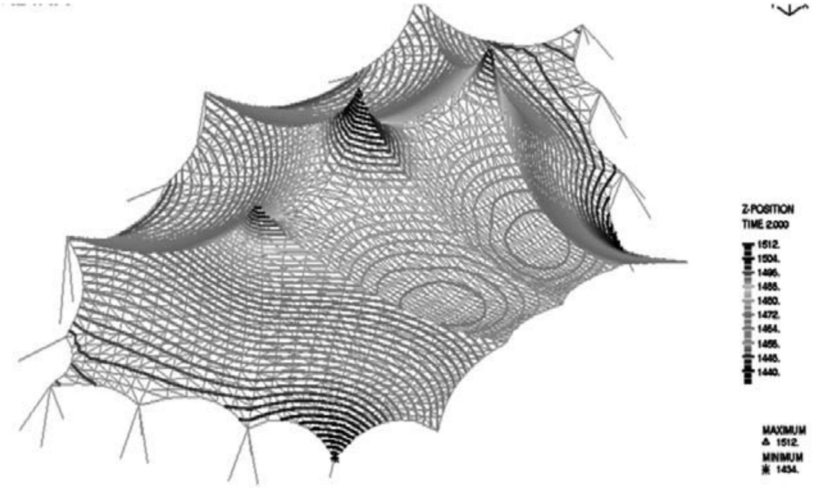

Fig. 6-4
Ponding Snow Simulation on Tensile Fabric Roof
(Analysis courtesy of Geiger Engineers)

While it is difficult to generalize for the wide spectrum of roof forms that can be realized in tensile membrane structures, there are common characteristics with respect to snow loading:

1. The surface characteristics of the membrane fabrics encourage sliding and wind scour of snow. The result is that many tensile membrane roofs may experience less total seasonal snow accumulation than is predicted from building codes. This can be further encouraged by good design, particularly by assuring that the paths for snow to slough off the roof are free and unencumbered. However, promoting snow shedding cannot always be achieved due to architectural constraints or where falling snow and ice might create a safety hazard at the perimeter of the roof.

2. While the overall seasonal accumulation of snow might be less than predicted by building codes, common tensile roof forms promote load concentrations from drifting and sliding. This is particularly the case in valleys and on the leeward side of cones or ridges.

3. Peak localized loads in valleys and on flatter surface regions down- slope from steep surfaces can develop when snow slides from the up-slope areas tributary to the region in question. The potential for sliding is greater for enclosed heated structures with high thermal transmission through the roof.

4. The regions of the roof surface most likely to accumulate drifted and sliding snow are generally in the roof's drainage path. Consequently, the snow mass that accumulates will increase with water saturation; the source of which can be the total up-slope roof area tributary to the location in question.

5. Membrane surface deformations and drainage characteristics of the roof surface are load distribution specific. Large deformations of the tensile membrane are common under snow loads.

6.4 General Design Parameters

As in all structural systems, the designer must consider a variety of possible failure mechanisms. The tensile membrane structural system and its components must be designed to withstand each of the failure possibilities. The membranes used in tensile membrane structures resist loads by tension. Intermediate cables may be used to help define the form and to reduce the effective span of the membrane. Surface cables are stiffer than the membrane. Consequently, when the surface is loaded, the membrane will deflect between the cables. This reduces the effective membrane span. A shorter span deflects to a smaller radius of curvature for a given allowable strength or strain. As noted in Section 5.4, the load carrying capacity of a membrane is inversely proportional to its radius.

Membranes are typically prestressed to a uniform biaxial level. Under applied load, the curvature and stress typically increase in one principal direction and decrease in the other until there is no tension and the fabric is slack. It is generally undesirable to lose tension over any significant area under any load condition. Once the membrane loses tension, it may bag or wrinkle. A change in load which could suddenly detension/tension or snap the membrane can be very destructive. Consequently, the prestress level is generally set high enough to remove any looseness on the pattern form and prevent slack fabric under applied load. As the prestress is increased, fabrication tolerances and patterning become more critical, more effort in installation is required and the strength reserve under maximum tension load is decreased. The level of prestress is dependent on the strength and stiffness of the fabric as well as the expected range of applied loads.

Deviating from installing membranes with a uniform prestress can be used to force a difference in the two surface radii of curvature. For example, increasing the longitudinal prestress relative to the hoop prestress in a cone like surface will tend to make the sides flatter. Most structural fabrics are bidirectional materials. Consequently it is possible to develop different prestresses in the warp and fill directions. However due to the typically low shear strength of most fabrics; developing different prestresses on a biased axis is usually not feasible. To the extent that the principal axes of curvature on the surface of a fabric structure are not parallel, patterning a material with parallel warp and fill fibers for an unequal prestress becomes particularly challenging. Uneven prestress tends to encourage wrinkling or loss of prestress perpendicular to the direction with the highest prestress.

Typical prestress levels are:

4-10% of breaking strength for cables
6-8 kN per meter for heavy PTFE/glass membranes
4-6 kN per meter for light PTFE/glass membranes
1-2 kN per meter for light lining PTFE/glass membranes
1-4 kN per meter for vinyl coated polyester membranes

The deflections of edge beams, arches and cable anchors are usually very small compared to the movement of the tensioned surface and are generally not considered. In mast-supported structures, the top of the mast may be stabilized with external cables or free to deflect with changes in the radial force distribution. If the top of the mast is not fixed, its position will follow from the relative tension of the fabric and cables attached to it. Membrane tension, particularly under applied load, is typically minimized if the mast is free to pivot. If movement of the mast is permitted, it should be modeled as a rigid body motion in the analysis. Under typical wind load, mast supported conic forms without external restraining cables will tend to deflect into the wind due to load-induced changes in membrane curvature. Similar behavior may occur with other rigid body elements such as arches, rings and struts which may be incorporated in the membrane design.

6.5 Design Issues Associated With Ponding

In the design of tensile membrane structures, particular care should be used to prevent excessive tension in tightly bounded areas, prevent ponding by snow or rain from large deflections and avoid flutter from the loss of prestress under applied load. The deformed shape of the structure under snow loads must be evaluated, with careful attention to areas of the surface that are vulnerable.

6.5.1 Low Slopes and Flat Regions

Roof surfaces that have low slopes or flat regions that are in the drainage path should be suspect and subject to investigation. Large membrane spans with large radii of curvature are potential sites of ponding and should be reviewed. The presence of a snow load can initiate a ponding situation as the initial “dimple” created is sufficient to initiate a pond in otherwise free-draining roof structures. Evaluation of the deformed roof form under live load and, if necessary, design adjustments to the shape can prevent these problems. Review of elevation contours of the deformed roof form to demonstrate that it is free draining is often sufficient to evaluate the surface. In the event that the deformed surface is not found to be free draining, the membrane shape (form and prestress) can be modified by revising the structural geometry, increasing the stiffness by introduction of cables at the membrane surface or increasing the membrane prestress. The presence of snow adds the uncertainty of what to consider for local load distribution and peak load intensity in this process.

6.5.2 Diminishing Slope

Structures with broad areas of progressively diminishing slope toward a relatively stiff perimeter or internal support can be problematic. When loaded with rain or snow these areas may deflect into synclastic curvature below the perimeter support encouraging ponding.

6.5.3 Drainage

Evaluation of the deformed surface for drainage is essential. This should be done as part of the evaluation of a shape in the design process. It may be appropriate to consider greater loads than are used to evaluate the strength of the membrane in evaluation of drainage. The formation of a non-draining pond in the membrane is a failure mechanism and thus should be considered as a limit state.

6.6 Analysis Techniques

Design live loads can be established from the appropriate local building regulations. Wind loads are usually critical. However, establishing consistent reasonable design pressures over a membrane surface can be challenging. Wind loads may be determined by wind tunnel models. Snow or rain load may be critical in some regions. Seismic loads rarely govern the design of lightweight tensile membrane structures, although they may be critical for some supporting components. Establishing appropriate prestress levels requires some understanding of the stress/strain characteristics of the materials and their allowable stress range under applied loads.

Identifying the equilibrium shape consistent with a given boundary and a prescribed prestress is usually a non-linear problem. Form finding solution techniques are discussed in Chapter 5, Form Determination. The effects of membrane movement to applied loads are usually significant and require a non-linear solution strategy. Materials used in the design of membranes are usually considered linear within the range of working values.

Analytic models used to design tensile membrane structures usually assume coincident membrane, cable, compression elements and applied loads at a joint or node. This may not be physically possible when actual member size and detailing are considered. The design forces in tension structures are often quite large; consequently even minor deviations from presumed concentric work points may be significant and must be checked by the designer.

6.7 System Components

Tensile membrane structures typically consist of many components. Successful projects require the designer to evaluate the load and performance criteria of the overall system and of each component.

6.7.1 Fabric

Membrane strength is typically measured prior to fabrication, shipping and installation. The allowable design loads for membranes are very sensitive to the type of material used, consistency and quality control of the manufactured membrane, the duration of load, long-term weather degradation, fabrication techniques and potential damage during construction. All of these factors tend to reduce the installed available strength. The consequences of membrane failure may range from incidental loss of weather protection to catastrophic structural failure. Typical membrane characteristics are discussed more fully in Chapter 3, The Material Characteristics of Fabrics.

6.7.2 Cables

Cables are available in a wide range of sizes, strengths, wire lay and materials. The most common cables are galvanized wire rope used extensively in construction rigging. The aircraft and marine industries support a wide range of small to modest sized stainless steel cables. Although their primary market may not be for building construction, many of these cables can be successfully adapted. Whenever cables are used in association with a tensile membrane structure, the designer must consider the type of load, the duration of load, the potential for creep, corrosion protection and other factors as necessary. Cable manufacturers typically identify the minimum breaking strengths for each size and type of cable they supply. The following strength criteria, taken from ASCE Standard 19-96, provide a starting point in identifying suitable cable strengths:

a. Breaking Strength $> 2.2\ T_1$ (6.7.2-1)
b. Breaking Strength $> 2.2\ T_2$ (6.7.2-2)
c. Breaking Strength $> 2.0\ T_3$ (6.7.2-3)
d. Breaking Strength $> 2.0\ T_4$ (6.7.2-4)
e. Breaking Strength $> 2.0\ T_5$ (6.7.2-5)

where:

T_1 = Cable tension due to D + P
T_2 = Cable tension due to D + P + (Lr or S or R)
T_3 = Cable tension due to D + P + (W or E).
T_4 = Cable tension due to D + P + L + (Lr or S or R) + (W or E)
T_5 = Cable Tension due to C = erection components of D, L, P and W.

C = Erection or temporary load during construction
D = Dead load due to the weight of the structure and the permanent features on the structure
E = Earthquake load
L = Live load due to occupancy and moveable equipment
Lr= Roof live load
P = Prestress force
R = Load due to initial rainwater exclusive of the ponding contribution
S = Snow load
W= Wind load

6.7.3 Beams, Columns, Masts and Rings

As noted in Section 6.3, the deflection of these components does not usually influence the membrane design. In the analytic models of the membrane, they are usually considered fixed or linked by rigid body motion. The reactions from the membrane analysis can be used as the design loads for the supporting structural elements. Concrete, wood and steel arches, struts, masts, and rings can be designed using the codes and design guides established for these traditional building materials. Dynamic loading is generally not a concern in the design of tensile membranes. The designer should consider the implications of the partial loss of a membrane to the overall stability of the structure. Generally, the supporting structure is designed to resist the maximum probable load the membrane could deliver and to remain stable in the event of sudden failure of a portion of the membrane surface.

6.7.4 Foundations

The foundations for tensile membrane structures must typically resist significant uplift loads. Where the supporting structure has significant weight or major foundations for other reasons, the cost premium to add a tensile membrane may be minimal. If a tensile membrane is the primary structure, the cost for the foundations may be significantly larger than they would be for a more conventional structure.

Chapter 7
Connections

7.1 General

Proper design of tensile membrane structure connections ensures that the working stresses in the structure are smoothly transferred to the cables or other reinforcing materials, and into the supporting structure. Design forces in cables and steel may be high, and connections must be designed to provide a path for these loads to flow to grade.

Tensile membrane structure connections must satisfy a range of parameters that makes their design uniquely challenging. These include the following:

1. Load Transfer: Most load is delivered to connections via steel cables that carry large forces in very compact areas. Connections must resist these high load densities and provide a path for the forces to flow to grade.

2. Displacement & Rotation: The high flexibility of membrane structures results in displacements and rotations under load that are very large relative to conventional structures. Connections should be detailed to ensure that proper flexibility exists to accommodate anticipated movements. This requires that rigid connecting elements either be isolated from the fabric or shaped to avoid damage to it, and that cable anchorages accommodate movement without kinking or otherwise damaging the cable. Where required, connection points must also retain weather tightness under expected movements.

3. Adjustability: Some fabrics in common use will experience creep elongation under long-term prestress and transient loads. These elongations must be considered in both patterning of the membrane and in connection design. Creep results in the loss of membrane prestress, which may in turn cause unsightly wrinkles and allow wind flutter to occur – conditions that may lead to damage of the fabric. If not accounted for, creep may also lead to connections with unbalanced loading and unwanted displacement. Where creep is a concern, selected elements of the structure must be designed to allow adjustment. Typically, this is accomplished by adjustment of the mechanism that was operated to create the original membrane prestress.

4. Assembly: Field assembly of shop fabrications typically requires joining highly flexible elements subject to large movements, while working from man lifts or rigging high above grade. In addition, the damageability of the membrane generally makes field welding of steel supports problematic once the membrane is in place. These constraints dictate the use of simple bolted or pinned details for most field connections.

5. Durability: Where connections are exposed to weather, care must be taken in their detailing to avoid corrosion. A variety of means of corrosion protection are available that include galvanizing or painting steel, or using stainless steel or aluminum elements. Accommodation should be made for touch up of galvanizing or paint that has been damaged during construction.

6. Membrane roofs generally lack ceilings or other elements to hide the roof structure, and structural connections are therefore typically visible from inside the building. The visual elegance and expressiveness of exposed connections is critical to the aesthetic success of membrane structures, and necessitates unusually close collaboration between architectural and structural designers.

Each membrane structure has unique connection requirements, and most connection designs provide for more than one technically acceptable solution. The commentary and schematic details in this chapter show or describe only the most common solutions to typical connection problems. The most successful structures employ connections designed to provide simple and direct load paths and a visual expression of the flow of forces that is intuitively clear to both designer and layman.

7.2 Fabric Joints & Terminations

7.2.1 Fabric to Fabric Connections

Fabric membranes are supplied in roll goods of varying widths. Patterns are then cut from the roll goods and the patterns are assembled together at the edges by heat sealing, gluing, or sewing to produce the final assembled fabric structure.

Membrane stresses must be transmitted through the fabric seams without creep, separation, or tearing. Typically, seams are created by lapping and fusing the membrane material to itself, and seams are generally designed to carry load up to the full tensile strength of the fabric. Seam strength is primarily a function of coating adhesion (for glued and welded seams) and seam width. Typical widths are 25 to 50 mm for PVC-coated materials and 50 to 75 mm for silicone and PTFE coated materials. Membrane manufacturers and fabricators should be consulted regarding seam details.

Assembly of fabric patterns should be done so as to minimize fabric seams and splices. Areas at corners and other areas of possible stress concentration should be reinforced with bias reinforcing patches. All fabric seams and splices should be arranged shingle fashion for optimal shedding of water. A typical seam arrangement is shown in Figure 7-1.

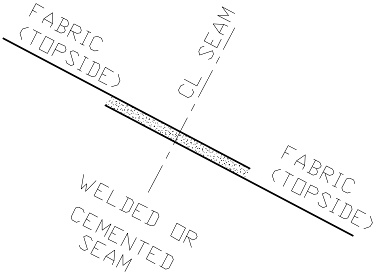

Figure 7-1
Standard Lap Seam

Fabric to fabric connections may be made in the field when the size of shop fabric assemblies must be reduced to accommodate limits on the size of panel that can be maneuvered within the fabrication shop, shipped, or handled during erection.

Depending on the logistics of erection, field seams may be made either on the ground or in place atop the roof's supporting structure. Roped fabric edges secured between clamp plates are used most often, and may be aligned with ridge or valley cable locations (Figure 7-2). Other, typically smaller roofs utilize lacing or other simple joining mechanisms between panels. Where the field joint is made in place and substantial tension must be applied in order to draw the fabric joint together, wider base plates may be substituted for conventional clamp bars so that come-alongs can be attached to draw the fabric together (Figure 7-3).

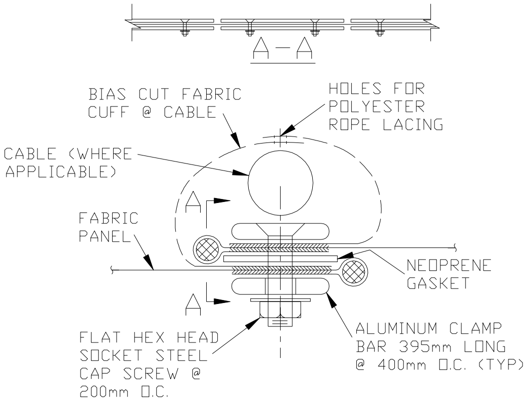

Figure 7-2
Field Splice

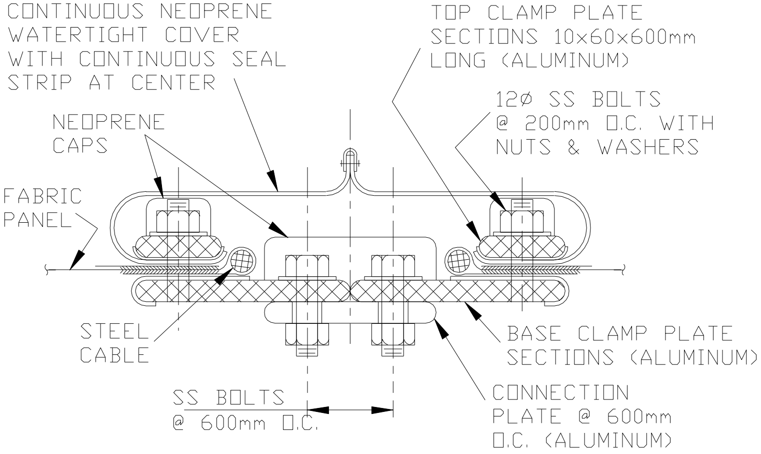

Figure 7-3
In Place Field Splice

7.2.2 Fabric Termination at Rigid Edge

Termination of a fabric membrane at a rigid edge condition, such as a concrete or steel curb, is usually accomplished by a fabric roped edge and clamping hardware (Figure 7-4). Clamping hardware is typically anodized or powder-coated aluminum, which can be cut, bent, and radiused to protect the fabric with relative ease, and is used in combination with stainless steel fasteners to avoid corrosion problems. The fabric terminates at a "rope" that is sealed inside the fabric edge to prevent it from pulling through the clamp bar.

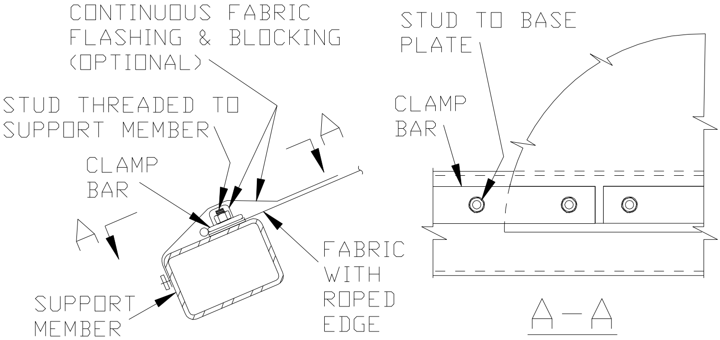

Figure 7-4
Edge Clamping

7.2.3 Fabric Termination at Cable

Termination of the fabric membrane at a cable location can occur where the fabric terminates at a catenary cable edge. These connections can be accomplished most simply by enclosing the cable within a fabric cuff which transfers the membrane stresses uniformly along the length of the cuff, as in Figure 7-5. The cuff material is generally cut with warp fibers at a 45 degree bias to the warp fibers in the main fabric panel, so that it can be curved to fit the line of the cable without wrinkling.

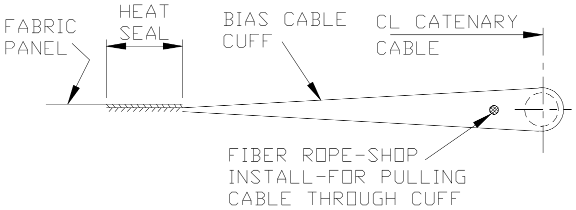

Figure 7-5
Cable Cuff

The designer must take care in sizing the cuff so that a clevis jaw or other cable termination will slide through it without binding. These fittings become prohibitively bulky on larger diameter cables, so that one end of the cable is sometimes terminated in a threaded "stud end" onto which the clevis jaw is threaded after the cable has been run through the cuff. A small diameter rope installed into the cuff when it is fabricated can be attached to the cable fitting to facilitate pulling it through the cuff.

Alternatively, a fabric roped edge can be compressed between clamping hardware, with the clamping hardware attached intermittently to the cable by means of straps, as shown in Figure 7-6. Where field assembly of sectionalized membranes is required, the two sections can be attached to either side of the cable by installing clamp bars and straps (as in Figure 7-6) to both sides of the cable.

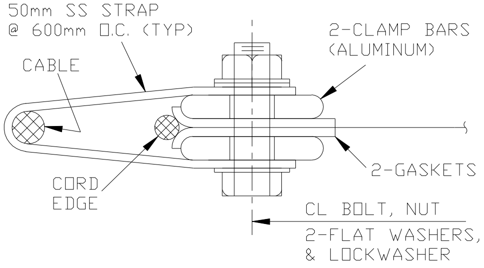

Figure 7-6
Cable Clamping

7.2.4 Fabric Termination at Corner

There are special detailing problems associated with the termination of the fabric at "corners", those locations at the edges of the membrane where catenary cables terminate at masts or other supporting elements. Small errors in patterning or cable length can have critical effects at these locations, where the fabric necks down to a small width. In addition, tension in the fabric tends to pull it away from the supporting member, causing it to ride up the cables and away from the support. This effect is generally not addressed in currently available software, which assumes that the fabric and cable share the same nodal geometry, such that sliding between fabric and cable is not modeled. The effect can be pronounced when the angle between the two cables is acute. While reinforcement of the fabric in this area is helpful, some supplemental mechanism for restraining the fabric is generally required. Often, the fabric is terminated beneath a clamp bar mounted to a "membrane plate". The plate typically also anchors the catenary cables at the edges of the membrane (Figure 7-7). In the detail shown, the cable or anchor rod is typically adjustable in length to facilitate adjustment and pretensioning. The socket fittings that anchor the catenary cables on the left side of the figure may also have a telescoping mechanism to facilitate adjustment of the individual catenaries.

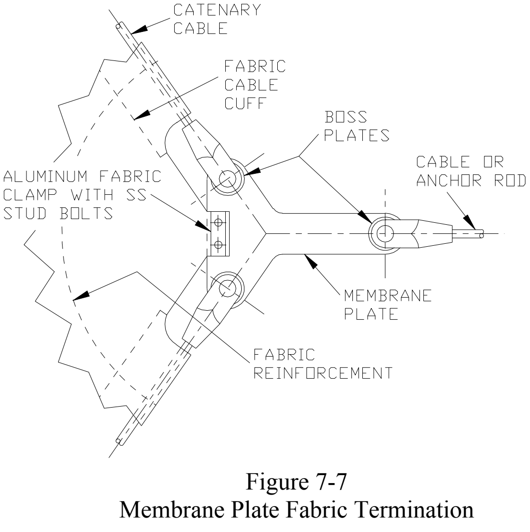

Figure 7-7
Membrane Plate Fabric Termination

Preliminary detailing of membrane plate connections is appropriate prior to the completion of final analysis. This detailing should consider the geometric requirements for fabric and cable terminations and the length required for any anchorage adjustment devices, so as to establish the relationship between all cable and anchorage work lines. Changes in the ratio between element forces under load will cause the membrane plate to rotate under various load combinations, and analysis can determine whether these rotations will cause unacceptable local stresses in cable terminations, anchor rods, or the membrane plate. In Figure 7-7, for example, increase in the force in the catenary cable towards the top of the figure relative to the force in the catenary towards the bottom of the figure will cause the membrane plate to rotate in a clockwise direction.

Membrane plate connections are important visual singularities that deserve careful attention to aesthetics. In Figure 7-7, fabrication expediency would suggest a triangular membrane plate, with straight edges between the catenary cable and anchor rod terminations. Necking these edges inward, as shown, provides a connection of greater elegance, with a lightness in keeping with the general character of the membrane structure as a whole.

7.2.5 Fabric Support at Rigid Element

Where fabric relies on a cable or steel member for support, it is usually carried by, but not attached to, the member. Often a seam is placed to coincide with the member in order to minimize the seam's visual impact (Figure 7-8). If not, and if the supporting element (generally a cable) is small, a bias wear strip can be provided, as in Figure 7-9. Plastic coated cables are preferred; however, bare cables can be used when enclosed in a protective fabric cuff.

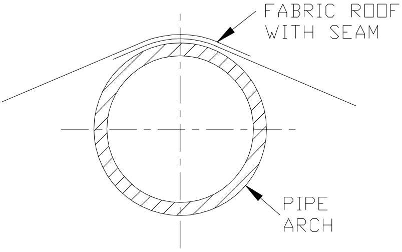

Figure 7-8
Pipe Arch with Fabric

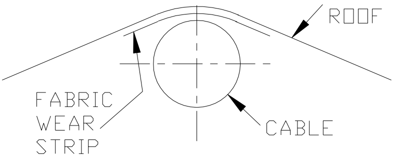

Figure 7-9
Wear Strip at Cable

If analysis indicates that the fabric may lift off of a supporting arch, it may be necessary to attach the membrane with a cuff or by clamping the fabric along the arch to control deflections and membrane stresses. A base plate and clamping can be used to attach the membrane to the arch, as in Figure 7-10. Care must be taken in detailing splices of the arch or connection of other steel elements to the arch to avoid potential contact of the fabric under load with sharp steel edges.

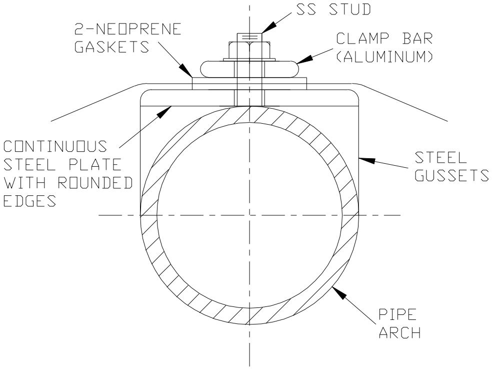

Figure 7-10
Pipe with Fixed Fabric

7.3 Cable Saddles & Terminations

The primary detailing problems of cables used in tensile membrane structures are termination at the cable ends and saddles that support the cable at angular changes created by intersecting elements along its length.

7.3.1 Cable Termination Hardware

Cable terminations must transmit cable tensile forces into the supporting structure. They may either be fixed or allow adjustment in cable length, and they may allow the cable to articulate through angle changes about zero, one, or two axes. A range of hardware that varies in adaptability, economy, and visual elegance is available to satisfy these requirements.

The most economical termination is a looped cable eye formed by a thimble and secured by U-bolted clips (Figure 7-11). Eye terminations provide for wide rotation about both axes, and can readily be made either in the shop or in the field. Their application is limited by their inelegant appearance and potential for improper installation, but they are suitable for temporary structures or those with limits on budget or need for sophistication. Swaging sleeves may be substituted for cable clips to enhance their appearance and reduce the potential for damage to the fabric from the exposed clips.

Cable eyes may be interlocked with one another to splice two or more cables together, and the eye ends of one or more cables can be linked with shackles to provide attachment to ear plates welded to the supporting structure. The thimbles used in cable eyes force the cable to a tight bending radius, and the designer must reduce the allowable cable capacity as recommended by the manufacturer or as validated by testing.

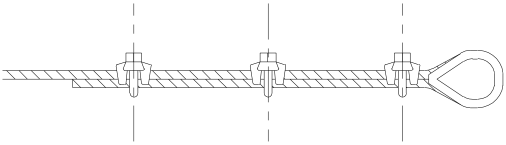

Figure 7-11
Cable Eye Termination

Swages and spelters (Figure 7-12) provide reliable fixed-length cable terminations that are generally more expensive, less bulky, and more sophisticated in appearance than eyes. In swaging, the fitting is clamped tightly onto the end of the cable. Smaller swages can be made in the field, although shop work is preferred. Spelters are formed by pouring molten metal inside a tapered sleeve as required to fix a cable whose wire ends have been spread open inside the fitting. Spelters may be made in the field, but are typically made in the shop, where work is faster and more reliable.

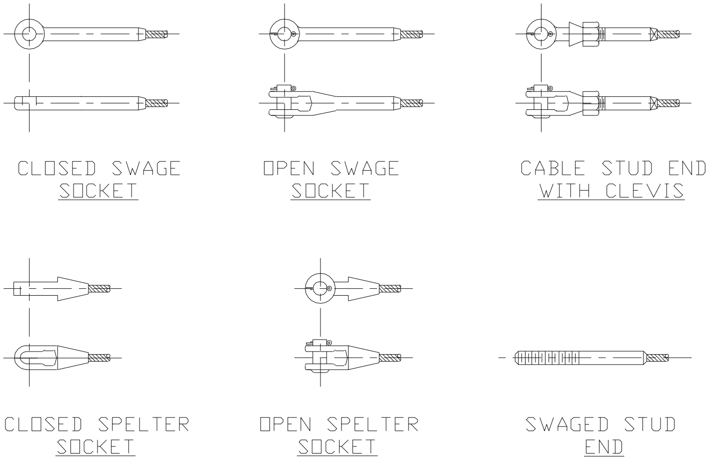

Figure 7-12
Swaged and Speltered Cable Hardware

Both swages and spelters are available with stud ends, which are male threaded terminations that provide adjustment in length. Stud ends may be fixed against rotation by installing a nut to either side of the attachment plate, or they may be allowed to rotate about both axes when a nut is installed only on the bearing side of the plate. Where necessary, rotation capability may be enhanced by the use of spherical bearing washers. Swages and spelters are also provided with jaw ends (which attach to a single ear plate with a pin), and closed ends (eyes that may be secured between pairs of plates or onto clevises). Jaws and closed ends allow rotation about a single axis in line with the center of the pin or eye hole, although pairs of shackles may be added to permit rotation about both axes.

Stud ends can be detailed to allow cable length adjustment, as discussed above. Cable length variation may also be provided by splitting the cable into two segments joined by a turnbuckle (Figure 7-13). Some proprietary jaw terminations also have threaded elements that permit limited adjustment.

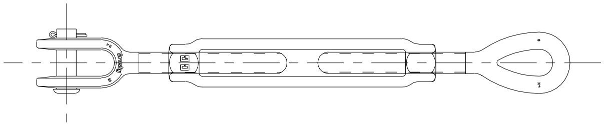

Figure 7-13
Turnbuckles

7.3.2 Cable Termination Design

All of the terminations described above typically attach to steel plates which are in turn attached to steel supporting members. These “ear plates” to which jaw, eye, or clevis terminations are attached must be sized with thickness and edge radius adequate to prevent both bearing failure at the pin and shear or tension failure on the net section of the plates adjoining the pinhole. Where the width of opening in a jaw-type fitting is substantially larger than the thickness of the ear plate, washer-shaped “boss” plates are welded to each side of the ear to match its thickness to the width of the jaw and prevent bending of the attachment pin (Figure 7-14).

At mast tops or other critical locations, multiple cables often connect at a single workpoint. Where this occurs, care must be taken to assure that the connection geometry provides necessary clearances between adjoining cable terminations and plates to facilitate installation and to allow for all displacements and rotations anticipated under load. Where possible, ear plates are configured so that the worklines of the supporting member and attached cables all coincide, and bending moments are not introduced to the member. However, it is sometimes necessary or appropriate to offset cable workpoints at a connection to satisfy geometric constraints, and both member and connection design must consider bending effects resulting from such workpoint offsets.

The attachment of ear plates to supporting members will induce local bending, particularly in thin walled pipes or tubes. The connection design must consider these moments, and adjust connection geometry or add reinforcing plates as required. Several approaches are possible:

1. At lightly loaded ear plates, or where supporting member walls are stout, ears may be welded directly to the outside face of the member.

2. Ears with intermediate force levels may be knifed through the supporting member to allow welding at both faces of the member.

3. Where force levels are high or where multiple ears make knife plates impractical, ring plates at the top and bottom of the ear may be utilized to reduce local bending and punching shear stresses in the supporting member.

4. Where forces are high but ring plates are unacceptable for visual or other reasons, ear plate connections may be devised in which the supporting member is cut into sections to allow the insertion of internal stiffening plates, then welded back together to leave only the ear plates visible.

The design of successful ear plate connections requires attention to resolution of forces, geometric conflicts, cable rotation under load, and aesthetics. Complex connections may also require ingenuity to resolve conflicting issues. A typical ear plate connection utilizing ring plates is shown in Figure 7-14.

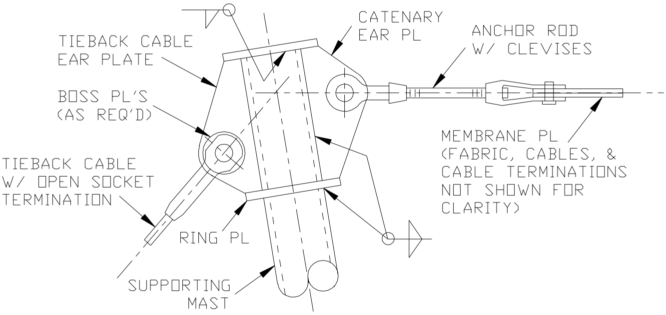

Figure 7-14
Cable Termination at Ear Plates with Ring Plate Reinforcement

Cable terminations are typically exposed on either the interior or exterior of the structure. Successful design of terminations and the supporting plates and members to which they attach must therefore respond to both technical and aesthetic requirements. Cable connections must be designed to resist imposed load, satisfy geometric constraints, and accommodate anticipated displacement and rotation. However, the choice of cable termination type (stud, jaw, or eye, and swage or spelter) and material (carbon or stainless steel) should also address considerations of visual elegance and lightness, and the visual congruity of the connection design with other elements of the building of which they are a part. Similarly, ear plate geometry should be designed to achieve compact connections and congruity with the angular geometry and lightness of the cables and membrane.

7.3.3 Cable Saddles

Where a cable passes without termination over a supporting member or one cable terminates into a second cable, a saddle is required to guide the cable's change of angle and control its radius of bend. The primary considerations in designing saddles are the size of the cable and its tensile force, the cable's range of directional orientation under load, and whether it must be restrained from sliding across the saddle (in order to effectively realize an analytically determined variation in cable force in the sections of cable to either side of the saddle).

In general, the large bending radius required for structural strand precludes its use with saddles, and wire rope is used where saddles are required. Bending a cable across a saddle causes a stress concentration in the cable, and its allowable load must therefore be reduced. The reduction is generally a function of the radius of the saddle relative to the radius of the cable, and required reductions are defined by ASCE19 and other standards.

Changes in the orientation of the cable under load must be considered in saddle design to assure that the cable does not bear against sharp plate edges that might cause damage under load. The saddle may also require some form of "keeper" to prevent the cable from popping out of it during erection or under extreme loading.

Where analysis indicates a substantial variation in the cable tension on the two sides of a saddle, some means of restraint must be provided to prevent the cable from sliding across the saddle. Moderate resistance to sliding can be provided by clamp plates or U-bolts, though these must not be installed in a manner that distorts the cable cross section and causes damage. Resistance to large differential forces on the two sides of the saddle may require the use of swaged sleeves or similar positive restraint to one of both sides of the saddle.

Some fabric structure designs require that a ridge, valley, or other cable terminate into a catenary or other continuous cable. At these connections, the discontinuous cable will typically terminate with a jaw or eye end fitting pinned to a saddle over which the continuous cable can ride (Figure 7-15).

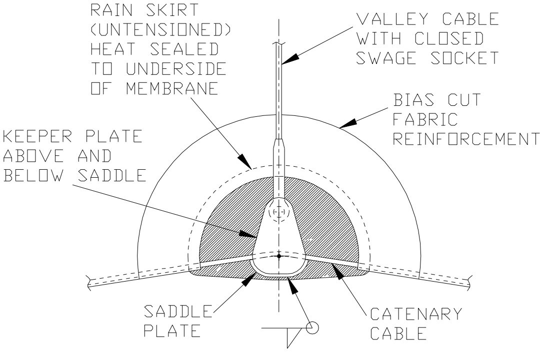

Figure 7-15
Cable Saddle at Ridge/Catenary Intersection

7.4 Mast Top Details

In fabric structures with conical form, the mast peak connection performs several structural functions. First, the radial tension forces in the fabric must be collected and delivered, without stress concentration, into the mast. The width of fabric typically necks down substantially as the fabric rises to connect to a tension ring at the mast top, and fabric stresses must be transferred over narrow lengths and often at locations confined by cable terminations. The mast peak connection also must provide a mechanism for anchorage of any radial cables that underlie the fabric, through fastening them either to the tension ring or directly to the mast peak itself. Where external cabling is used to stabilize the mast peak or for some other purpose, it also must be fastened to the mast. Lastly, mast peaks are commonly used as the location for membrane tensioning devices.

Typically, the fabric at a mast top terminates at a rigid ring constructed with a rolled steel tube or similar member. Plate or tubular steel standoffs may fix the geometry of the ring relative to the top of the mast (Figure 7-16), or turnbuckles or threaded rods may allow the ring to "float," thereby permitting field adjustment to perfect fabric or cable geometry (Figure 7-17).

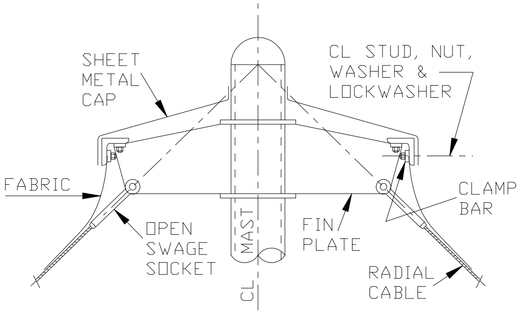

Figure 7-16
Fixed Mast Top

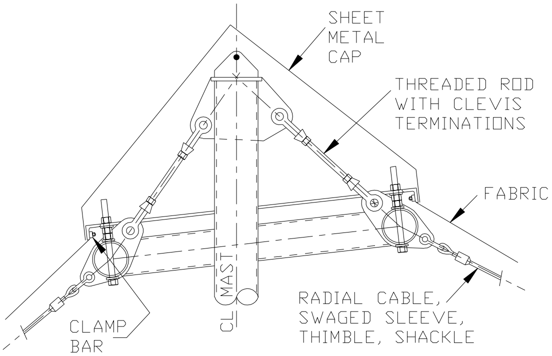

Figure 7-17
Floating Mast Top

The mast peak also performs important nonstructural functions. Some peaks are designed to allow ventilation of hot rising air through the inside of the tension ring (with or without the addition of a cap configured to keep out rainwater, while others are sealed against both air ventilation and water infiltration. The mast peak is an important visual singularity, and its appearance and coordination with the visual vocabulary of other elements of the structure deserve close consideration.

7.5 Mast Base Details

The connection at the base of a mast or post requires only the termination of a single compression member without the complexities of fabric and cable termination that occur at the mast peak. While the technical requirements of the mast base are relatively simple, it is also is an important visual element in the design and one whose refinement is made more important by its proximity to viewers at grade level.

The fundamental design variable in the mast-base design is force level and the degree of freedom of the connection. Depending on its configuration, the mast may be fixed in a manner that prevents rotation about its base, or it may be allowed to rotate about one or both axes of the mast.

Fixed bases have the advantage of allowing the mast to stand vertical during erection, like a flagpole, without benefit of any guying cables; and they are appropriate where lateral movements at the top of the mast do not induce excessive bending in the mast or where it is not possible to use guys or other devices to resist lateral loads at the top of the mast.

Single degree of freedom bases are useful where the mast or post is expected to rotate primarily about a single axis, as at the perimeter of a structure where the roof is tensioned by shortening tieback cables to displace the tops of the perimeter posts outward. In a manner analogous to a cable jaw end, a single degree of freedom mast base can be achieved by knifing a vertical plate welded to either the mast or the base plate between a pair of plates welded to the opposing element (Figure 7-18).

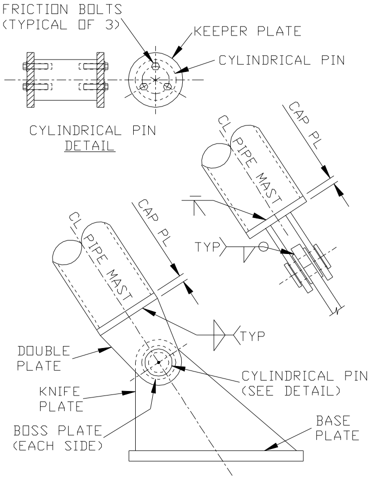

Figure 7-18
Single Degree of Freedom Mast Base

Mast bases with two degrees of freedom allow the top of the member to displace freely about both its axes, as is required when such displacements may occur either during erection or in service. Bases that are true pins may be created with spherical bearing plates. Mast bases that are stable over wide angle changes about both axes are sometimes required for deployable roofs, and they may be created with mechanical gimbals.

Adequate rotational capacity can generally be obtained with a reduction in both expense and visual expressiveness by placing a pad of elastomeric or other flexible material between the mast bottom plate and the base plate that rests atop the foundation. If such mast bases rest on the base plate without positive securement to it, it is important to ensure that the mast has compressive load throughout erection and under all load cases, so that the mast cannot pop out of its bearing (Figure 7-19).

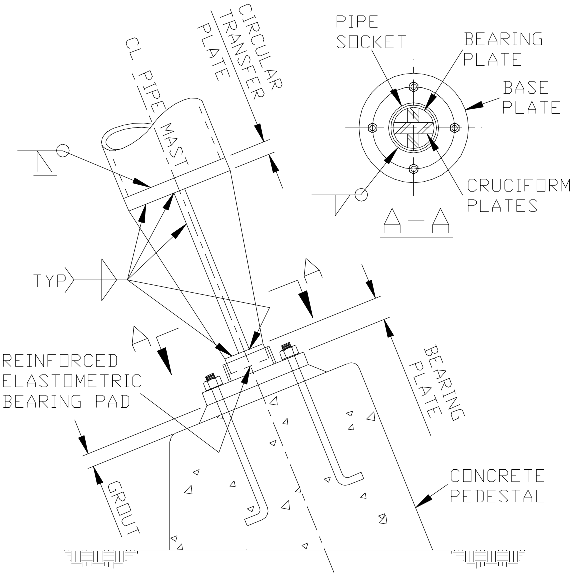

Figure 7-19
Two Degree of Freedom Mast Base

7.6 Pretensioning Mechanisms

Tensile membrane structures derive their distinctive appearance, stability under load, and even their name from the presence of consistent pretensioning in the fabric membrane. Pretensioning mechanisms should allow for relative ease of force application, and should accommodate re-tensioning or release of tension when required to adjust for fabric membrane creep or the requirement that a structure be erected and taken down repeatedly. Pretensioning mechanisms also generally provide a range of positioning to permit deviation from design workpoint locations when required to achieve appropriate tension levels. Well designed tensioning details result in structures that are straightforward to erect and, when left exposed in the finished roof, are elegant and expressive of the flow of forces in the tensioned roof.

7.6.1 Direct Tensioning of Fabric

The simplest tensioning mechanisms employ simple, clamped edges similar to those used in some awnings. The fabric may have a roped edge that is secured between metal plates, as discussed earlier in this chapter. Single aluminum clamp bars (Figure 7-4) do not readily adapt to tensioning. To facilitate tensioning, other designs provide a base plate beneath the fabric that has holes for securing come-alongs or other mechanisms that pull the fabric out to its final position (Figure 7-20).

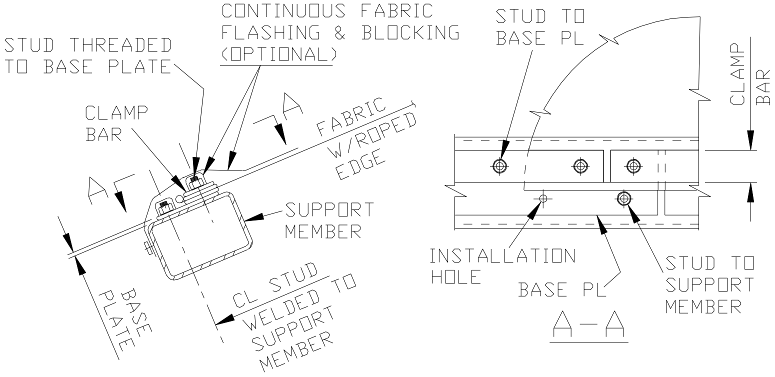

Figure 7-20
Direct Fabric Tensioning Detail

Direct fabric tensioning systems are useful on small structures with low prestress forces, and on those with no masts or perimeter catenary cables that may be adjusted to provide tensioning of the fabric. In comparison to other tensioning mechanisms, they have the advantage of simplicity, but they require that tension be applied manually to the fabric at close intervals and generally provide no allowance for adjustment. Direct tensioning systems may be designed to allow adjustment or re-tensioning of the membrane, using mechanisms of the type shown in Figure 7-21.

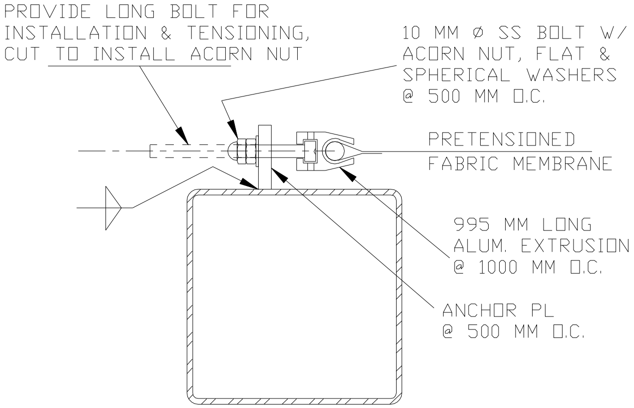

Figure 7-21
Adjustable Direct Fabric Tensioning Detail

7.6.2 Cable Tensioning Mechanisms

While the above systems rely on direct application of tension to the continuous edge of the fabric, greater simplicity is generally achieved by providing movement at one or a few points on the supporting structure. Often this is done by providing adjustments in cables. In one system, shortening perimeter tieback cables by adjustment of a turnbuckle pulls back on perimeter support posts; this in turn tensions the catenary cables at the edge of the fabric and draws the fabric itself into tension (Figure 7-22). Tieback cable tensioning devices are readily applicable in structures where the fabric terminates in a perimeter mast system, and where the obstruction at grade created by the tieback cables is acceptable. Alternatively, pretensioning may be induced at catenary cables, where, by operating a threaded cable ear plate connector, the cable attachment points are pulled outward to elongate the catenary cables and thereby bring tension into the membrane (Figure 7-23). Because the entire roof may be tensioned by making adjustment at only a few locations, both types of cable tensioning systems have an advantage in ease of erection over direct tensioning of the fabric.

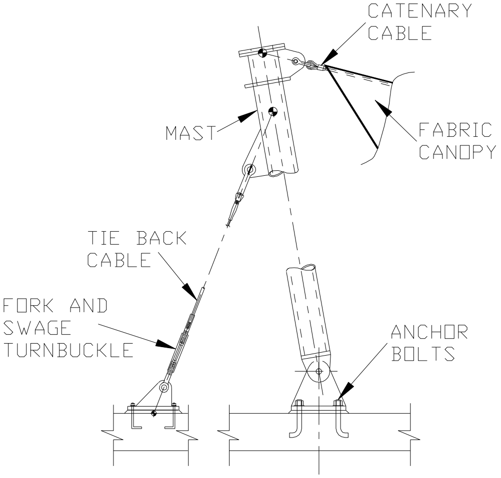

Figure 7-22
Tieback Cable Tensioning Mechanism

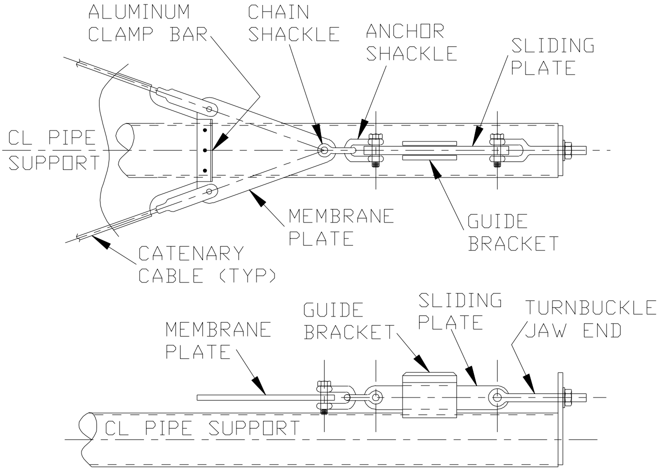

Figure 7-23
Catenary Cable Tensioning Mechanism

7.6.3 Mast Tensioning Mechanisms

A tieback cable tensioning system applies tension to the fabric by reducing the length of tension members (cables). Mast jacking systems, conversely, apply tension to the fabric by increasing the length of compression members (masts or struts). Like cable tensioning, mast jacking provides a means for tensioning a large area of fabric by making adjustments at a few discrete locations, and it shares applicability to structures with catenary edge cables. Like direct fabric tensioning systems, though, mast jacking also is useful on structures with rigid perimeter elements.

Bottom of mast mechanisms may result in a bulky element at grade that obstructs use of the building space and detracts from the structure's visual lightness. This may be overcome by founding the base of the mast inside a pit in the mast footing (Figure 7-24). Both the mast jacking frame and the hydraulic jacks used to raise the base of the mast are temporary elements that are removed following pretensioning, so that the base of the mast is left unobstructed at the completion of construction.

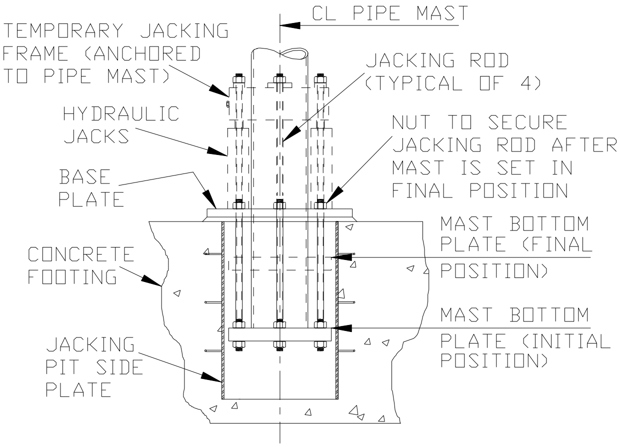

Figure 7-24
Bottom of Mast Jacking Mechanism

Moving the tensioning system to the top of the mast provides another escape from bulky ground level mechanisms, although the erection procedure is made more complex by forcing workers operating the jacking mechanisms into crane baskets high above grade. Whereas bottom of mast systems may require multiple jacks, only a single hydraulic jack is required atop the mast cap plate in order to raise all of the cables terminating at the sleeve surrounding the mast (Figure 7-25). A temporary jacking frame or plate is again employed to provide a bearing for the jack.

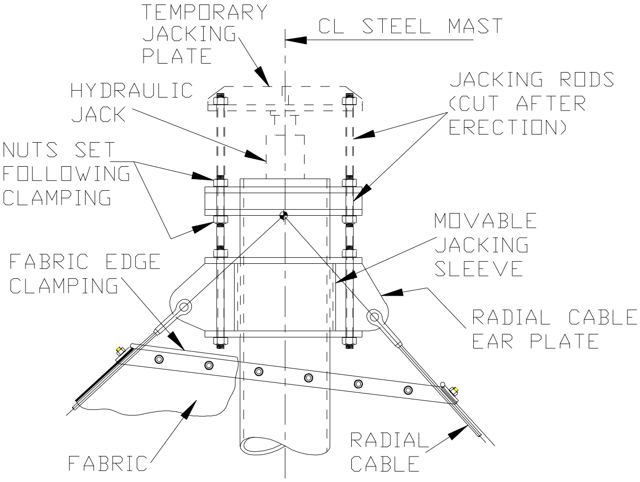

Figure 7-25
Top of Mast Jacking Mechanism

Chapter 8
Non-Structural Performance Considerations

8.1 Tensioned Fabric Structure Applications

8.1.1 Introduction

Variability of form is a hallmark of tensile membrane construction, and membrane shapes can be adapted to fit a wide range of building footprints. As a result of the curvature requirements of the membrane, however, these structures typically have fairly tall profiles in elevation, and cannot easily be adapted to the flat roof profile of conventional construction. Near flat membrane profiles are only possible on small structures or those with members that support the fabric at close intervals. In the latter type of application, the membrane serves more as a cladding material than a true structural element.

An attractive feature of tensile membrane structures is their enormous range of spanning capability. Membranes have been used in a number of applications as an alternative to translucent glazing, using pretensioned fabric without curvature over spans up to 4 or 5 meters. Membranes supported on arches or other shaping elements are common in skylight applications with spans of 20 meters or more.

Membranes have been used just as effectively in stadiums and other assembly structures with spans of up to 250 meters. In these applications, the membrane is typically restrained or supported by steel cabling in conjunction with air pressure or rigid steel elements, so that its unsupported span is seldom greater than 20 meters. (On spans greater than this limit, membrane stresses and deflections tend to become excessive.) While air-supported and cable dome roofs can and have been sheathed in materials other than fabric, the membrane provides a significant portion of the strength and stiffness of these roofs, and is integral to their global behavior. Design of these structures explicitly considers the properties of the fabric, and these roofs are therefore appropriately considered true tensile membrane roofs rather than membrane clad roofs.

It is useful to categorize the basic forms of membrane structure application in order to delineate the particular issues or advantages associated with each. Membrane structures may be categorized according to their relationship to other construction: as membrane covers (membranes that serve as building roofs or complete enclosures), attached membranes such as awnings), or internal membranes (such as decorative or acoustic ceiling membranes).

8.1.2 Membrane Covers

The majority of membrane structures cover space and carry their own loads to grade. Because they form an exterior shell, they are exposed to environmental loadings that may include wind, snow, rain, and ice, and their design must provide membrane shaping appropriate both to providing efficient load resistance and shedding of precipitation. Membrane covers may in turn be categorized as ones that are open-sided or that enclose space. Open sided structures are perhaps the most common application of tensioned fabric, as they take advantage of the material's ability to provide protection from sun and precipitation, while maintaining almost unlimited ventilation and visual transparency to the exterior. Their application is limited by their inability to control temperature and other environmental factors, or to provide security. Common open structure applications include stadium grandstand covers (Riyadh, Figure 1-9 and Seoul, Figure 1-19), amphitheaters (Woodlands, Figure 1-10; Chene Park, Figure 1-11; and Pier Six, Figure 1-13), and entrance canopies (Hampton Roads, Figure 1-22).

Enclosed structures provide the opportunity to create complete interior climate control. The energy efficiency of such structures (discussed in Section 8.3) is highly dependent on local climate, fabric optical properties, and whether multiple fabric layers, insulation, or other special measures are used. Applications for enclosed structures can range from greenhouses using transparent film membranes to convention or theater facilities that employ opaque fabric to provide complete interior lighting control. Examples include recreation facilities (La Verne College Student Activities Center, Figure 1-7), exhibition buildings (the U.S. Pavilion at the Osaka World Fair, Figure 1-5), airport terminals (Denver Airport, Figure 1-14), and stadiums (Georgia Dome, Figure 1-16).

A few designs have taken advantage of the light weight and flexibility of fabric membranes to provide "convertible" structures where the fabric membrane can be opened or even removed, thereby realizing some of the advantages of both enclosed and open structures. Sometimes the membrane slides along its supporting cables to open and close the roof, as is the case with the Commerzbank Arena (Figure 1-26) and the Kufstein Canopy (Figure 1-28). In other convertible structures, the membrane is supported by a rigid structure which moves or articulates to convert from closed to open form. This approach avoids membrane stress or strain associated with the conversion, and the associated risks of fabric damage. Finally, some convertible structures employ cables and framing members that fold or disassemble along with the membrane. These designs require careful attention to erection and disassembly mechanisms and to material choice, in order to avoid damage during deployment. At the Carlos Moseley Music Pavilion (Figure 1-12), for example, vinyl-coated polyester fabric and Kevlar cables were used because of their ability to accommodate the tight bends associated with packaging the structure between deployments.

8.1.3 Attached Membranes

Attached membranes are covers which are supported at least in part by adjoining "hard" building construction. Attached membranes may serve several important architectural functions. Perhaps most important, they provide a "soft" transition between interior and exterior that is characterized by protection from precipitation, transparency to the exterior areas adjoining the building, and lighting levels that are intermediate between that of the interior and the open exterior. Attached membranes also often serve to signal or draw attention to a building's entrance or other focal point.

As covers, attached membranes are still subject to all environmental loading, but reactions due to the combined effects of prestress, dead load, and environmental loading must be transmitted to and resisted by the supporting construction. Horizontal reactions from attached fabric membranes may be large, relative to traditional framed structures of similar size. Successful designs may employ internal compression members to counteract membrane and cable tension forces without transmitting these forces to the support structure.

Traditional storefront awnings are attached membrane structures in which uncurved and unprestressed fabric is supported directly on lightweight metal framing. While awnings are exterior structures subject to environmental loading, they are generally small in scale and can generally be successfully designed without great expertise by proportioning members and connections in accordance with past practice. The engineering of such traditional awnings is not addressed in this document.

8.1.4 Internal Membranes

Internal membranes, like that at the Strong Museum of Play (Figure 1-30) are used for manipulation of lighting, acoustic control, thermal insulation and visual drama inside buildings. As interior structures, they avoid environmental loading, thereby reducing the need for efficient anticlastic shapes and eliminating the need to provide the membrane slopes necessary to shed precipitation. The avoidance of environmental loading makes a wide range of artistically derived shapes available that might be impractical for exterior applications, and can even allow at times the use of highly deformable, unpatterned knit fabrics whose dimensional instability makes them impractical for the loads associated with exterior applications. Furthermore, their shielding from direct sunlight greatly reduces the hazard of ultraviolet radiation damage, and allows the use of more economical materials. Materials such as lightly coated PVC polyester fabrics that would be inappropriate for exterior application are often used in this application.

8.2 Fire Safety

Contemporary tensioned fabric structures have the ability to provide fire safety far better than that of traditional non-synthetic tenting materials. The standard fire tests that have been adapted for use in measuring the fire performance characteristics of these materials are described in Chapter 3. These tests provide the basis for determining the applicability of various fabrics to the various occupancies given in the building codes.

For purposes of the International Building Code, materials which can both pass ASTM E136 (2) and have flame spread per ASTM E84 (1) of less than 50, qualify as non-combustible building construction materials and can be used in Type IIB construction. (Reference Section 3.4 for discussion of specific fire tests). Combustible materials are restricted to use in Type V construction. Additionally, noncombustible materials used exclusively as a roof or skylight and located more than 8 meters above any floor, balcony or gallery are deemed to comply with the roof construction requirements of any Type construction. Combustible membrane materials used under the same conditions are limited to Types IIB, III, IV and V construction, In general, contemporary fiberglass fabrics are able to achieve the non-combustible classification while polyester fabrics are not.

8.3. Energy Use and Lighting

Lightweight structures have very different material properties as described in Chapter 3 and should be used in different ways depending on the surrounding climate, much the way conventional buildings are designed. To create an environmentally responsive building, the different climates in each region must be first considered and a strategy for the local regions developed. Regarding North America, there are approximately eight different climates which cover the continent and they require different environmental approaches in the use of fabric as an environmental barrier. The most important four of these climates include a cold climate that runs east west from the Northeast through the Midwest into Canada and into the Northern Pacific, a mixed/hot humid climate in the Southeastern states, a hot dry climate across the Southwest and a Mediterranean climate along the Pacific Ocean in the Western coastal states (See Figure 8-1).

Figure 8-1
Map of North American Climates

Each of these climates requires a different building envelope approach. In a cold climate, insulation with multiple high translucency membranes such as ETFE foil pillow systems work well, particularly if the design incorporates a system for condensation removal. In hot and dry zones which require summer solar shading, mesh fabrics and adaptable solutions for temperature differentials between day and night are essential. In hot/humid zones, solid fabrics for rain protection with protected openings at fabric peaks for the movement of air (Venturi effect) are important. All enclosed fabric structures, whether they are a series of woven fabrics or foils usually require a minimum of two skins, with each additional skin providing additional insulation values. Maximum R values of four can be reached with these tensile fabric materials and even greater insulation can be reached with foil membranes with multiple layers.

Since all these membranes have little mass, the designer is required to use the building itself as a thermal sink and building solutions using radiant flooring and mass slabs offer a conducive counterpoint to the lightweight roof system. The foil system has capacity for variable shading technology and has turned indoor spaces into environments that can control or dramatize the effects of the sun. To achieve this dynamic shading, various positive and negative print patterns can be developed and printed on the outer two layers of a three-layer system. The simple change of position of the middle layer, either to the top or bottom of the system, can transform the system's transparency. The range of transparency of the system is project specific and is determined by the designer's intentions and building performance. This variable condition can also be utilized to dynamically alter the thermal properties of the system to the desired performance.

The naturally translucent properties of the fabric (between 0 for "blackout" fabric and up to 96% for foil) allow the designer to eliminate the need for artificial lighting during daylight hours, saving on lighting energy for the building. Daylighting under white fabrics is commonly used for permanent architectural applications and creates a very diffuse and balanced light. These features are favorable to applications such as sports facilities, exhibit halls, transportation facilities and atriums. Because of the wide range of translucencies, fabrics with translucency in excess of 20% can support some plant growth underneath and those with translucency in excess of 40% allow several types of grass to grow underneath. Table 8-1 below shows the relative reflection and absorption rates for different fabrics and assemblies.

	Assembly No. / Properties	Assembly 1	Assembly 2	Assembly 3	Assembly 4	Assembly 5	Assembly 6
Solar	Reflectance	10-50%	30-75%	65-75%	60-65%	60-70%	60-70%
	Absorption	50-90%	13-68%	13-19%	12-20%	28-34%	28-35%
	Transmission	0	2-12%	6-22%	15-28%	4-6%	2-5%
U-value	Summer (12 km/h Wind)	Varies	0.75	0.81	0.81	0.45	0.08-0.14
	Winter (24 km/h Wind)	Varies	1.15	1.20	1.20	0.54	0.08-0.14

Assembly 1: Conventional Roofing
Assembly 2: PVC Fabric
Assembly 3: PTFE Glass Fabric
Assembly 4: Silicone/Glass Fabric
Assembly 5: PTFE Glass w/Liner & 250 mm Air Space
Assembly 6: PTFE Glass w/Translucent Insulation

Table 8-1
Solar and UV Reflectance and Absorption rates

8.4 Acoustics

The acoustical performance of fabrics is characterized by the high reflectivity of sound vibrations, particularly in the frequency range of 500 to 2000 Hertz. This means that high frequency and mid frequency sounds are generally reflective and low frequencies pass through the fabric. Fabric structures usually take either a saddle (hyperbolic shape) or a cone shape (pseudosphere) as discussed in Section 5.2. The saddle shape works better for acoustics than a cone shape since it blends the sound while the cone shape traps the sound (see Figure 8-2). For musical performance structures, an acoustician should join the team as the acoustic requirements for different types of music vary widely as amplified music requires a different tensile approach to that of classical music.

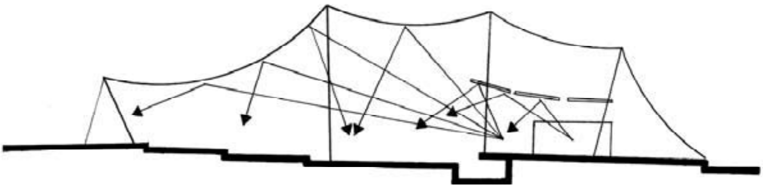

Figure 8-2
Acoustic reflectance based on saddle shapes as blender and reflector of sound.

Sound transmission loss through the fabric is another important consideration in public structures where building occupants must be shielded from outside noise. Like sound reflectivity, transmission loss is highly dependant on frequency of vibration, with tests on structural fabrics indicating a moderate transmission loss of approximately 5 decibels at 100 Hertz, ranging up to 30 decibels at 500 Hertz. (Normal human hearing is in the range from 20-15,000 Hz, with middle C having a frequency of 262 Hz.).

Sound reflectivity can be decreased and transmission loss increased by installing lightweight porous liner fabrics inside the space. Fiberglass insulation between two layers of fabric can further increase transmission loss. With sufficient absorption, neutral acoustic spaces can be achieved. A neutral acoustic balance is a space where sounds generated inside are neither reflective nor absorbed. However the effects of this inner fabric layer on day-lighting, fire safety and insulation must be considered, as secondary layers also curtail the translucency of the fabric. Porous vertical banners can also be suspended at intervals under the fabric roof in order to increase sound absorption and break up the geometric reinforcement of the curved fabric roof.

8.5 Aesthetics

Tensioned fabric structures have a unique visual character founded on the following features:

1. Fabric roof forms are curved between supporting elements in a manner reflective of the flow of tension forces within the membrane. With the exception of air-supported or air-inflated structures, these curvatures are anticlastic in nature. The overwhelming majority of contemporary construction is based on rectilinear forms, and the curving forms of fabric structures give them an inherently different and dramatic character.

2. Structural, lighting, fire safety, and other elements serving the membrane structure must generally remain exposed inside the space, as the opaque ceilings of most conventional structures are absent. Well engineered structures are sensitively detailed to provide visually "clean" connections that are expressive of the transfer of forces between members. Similarly, lighting and fire sprinklers can often be hung directly from roof cabling or otherwise detailed so that they complement rather than compete with the curving roof form.

The inherent visual drama of tensioned fabric structures is a key factor both in their use for certain architectural functions and their avoidance for others. Architects have found both this appearance and the long span ability of fabric particularly appropriate for athletic and entertainment facilities. Designers may choose either to exploit or disguise the divergent visual character of membrane structures. Terminating the membrane edge with a curving catenary cable, for example (Figure 8-3), highlights and complements the curving membrane form, while anchoring the edge to a rigid steel beam (Figure 8-4) lessens the voluptuous impact of the membrane curves and adds to the visual mass of the design. Similarly, minimizing the use of external guy cables or exposed struts and other straight members that fall outside of the membrane silhouette leaves the curving membrane form unfettered and most expressive.

Figure 8-3. The Minx Restaurant, Glendale, California
(Photograph with permission from Craig G. Huntington)

Figure 8-4. San Francisco International Airport Parking Canopy
(Photograph with permission from Craig G. Huntington)

In most forms of construction, it is common for the structural engineer to defer consideration of aesthetics to the architect. Because of their membrane behavior, however, the forms of fabric roofs can be manipulated only within limited bounds determined by the engineer. Furthermore, the exposure of structural connections in the finished structure makes the detailing of connections an important part of the structure's appearance. Because of these factors, the engineer must have a strong sensitivity to aesthetic issues and is often required to lead the architect towards more attractive connection designs.

8.6 Availability of Materials and Labor

Contemporary structural fabrics are specialized, high technology products produced by a limited number of manufacturers. Nearly all applications require that they be shop fabricated and shipped long distances to the construction site. Because of the light weight and compact form of the fabric, however, this is not a major cost factor or hindrance to their use, though attention must be given to handling, wrapping, storage and shipping to avoid any fabric material damage.

Field erection of the membrane is also a highly specialized activity, and local labor is typically not skilled in installation. Fabricators generally send their own crew to the job site or, as a minimum, they provide experienced supervision for erection by ironworkers or other local labor forces.

8.7 Maintenance, Durability and Inspection

Design, materials, construction, and environment are all factors affecting the durability and maintenance requirements of tensioned fabric structures. Design factors that influence durability and maintenance include the following:

1. Determination of appropriate loads and an accurate stress analysis are required to prevent overstresses in the fabric that may result in tears or other damage.

2. Where structures are located in an unsafe area or on an unsecured site, they should be configured so that the fabric is not subject to knife cuts or other vandalism.

3. Cables, arches, mast peaks, and other discontinuities in the fabric provide potential locations of stress concentration or abrasion. Care must be taken to provide accurate patterning at such locations, and support elements must be detailed to eliminate or protect the fabric from corners or edges that might lead to tears. In some structures, the fabric is reinforced by a second fabric layer at such locations.

The properties of various fabrics are described in Chapter 3 of this document. The resistance of the material to ultraviolet (UV) radiation exposure and other sources of environmental degradation must be considered against the expected lifespan of the structure in choosing the fabric. In selecting the materials for cables and cable fittings, similarly, exposure to corrosive effects must be considered in conjunction with required durability.

Care taken in packaging and shipment of fabric to the site and in erecting the fabric are critical to preventing soiling, weakening of the material due to sharp folds, and fabric tears. The risk of such damage is partially a function of the material choice.

Exposure to ultraviolet radiation from direct sunlight is the primary environmental factor in fabric durability. Polyester-based fabrics are generally more susceptible to UV damage than fiberglass-based fabrics, although coatings of Tedlar and other materials have improved their durability. At certain sites, consideration must also be given to soiling effects from air pollution and engine or cooking exhaust, or other sources, and to potential abrasion damage from wind-driven sand or other matter.

Properly designed and constructed fabric roofs generally require little maintenance until degradation from ultraviolet radiation or other sources necessitate replacement of the fabric or demolition of the structure. Roof owners are generally supplied with kits for repair of small tears, and may occasionally require the services of the roof supplier to effect patching or replacement of sections of fabric where more severe damage has occurred.

Periodic inspection by the manufacturer or other qualified personnel is recommended. The scope of such inspections should generally include checking for abrasion of the fabric at interfaces with other elements.

8.8 Cost Issues

Interest in tensioned fabric structures is often based in part on the assumption that "tent" construction is inexpensive. In reality, the cost of fabric structures varies widely, and their expense relative to alternative roof systems is dependent on the type of roof with which they are compared and, in some cases, the desire of the owner to make an iconic or other architectural statement. Measured in dollars per square foot of plan area, exclusive of foundations or other supporting structure, the cost of a custom permanent tensile fabric structure generally varies between \$700 and \$1700/m^2. Standardized structures may cost as little as \$250/m^2. Some of the parameters affecting tensioned fabric structure cost are discussed in the paragraphs below.

8.8.1 Material Choices

Certain knit materials and lightweight fabrics using vinyl-coated polyester or other materials are typically low in cost, but generally unsuitable for structures of substantial size that are subject to significant environmental loading. Polyester-based materials offer the lowest cost structural fabric, while fiberglass and expanded PTFE materials command a substantial cost premium. The difficulty in handling the strong but brittle fiberglass fabrics results in higher costs for erection of membranes using this material.

8.8.2 Symmetry and Repetition

By designing structures with symmetry about one or more axes, and by providing repetitive modules, analysis, patterning, and fabrication costs can all be significantly reduced.

8.8.3 Scale

Because membrane structure dead load is generally small and because the cost of fabricated fabric does not vary dramatically with increases in fabric stress, cost per unit plan area does not rise as dramatically with increase in span as it does with conventional construction.

8.8.4 Structural Efficiency

Design choices that result in efficient structural behavior can yield significant economies. For example, reasonable fabric curvature is required in order to limit fabric stress and cable force, and to achieve stability under wind load. Increased curvature results in an increase in the height of the structure, which can in turn cause a significant increase in the amount of fabric required to cover a given plan area, as well as an increase in wind exposure. Increased curvature may also result in long compression members, with resulting large cross sections to avoid buckling. The most economical structures have geometry that balances these competing considerations.

Chapter 9
Fabrication and Construction

9.1 General Technical Approaches

9.1.1 Patterning – Lay Down from 3D to 2D

Based on the current practice of installing virtually all tensioned fabric structures with a certain amount of initial, and final, pre-stress, the fabrication and installation phases of a project are crucial elements in the quest for a successful structure. Pre-stress stretches the fabric out to minimize wrinkling, which is unsightly. Pre-stress also serves to reduce the likelihood of ponding water on the surface. Beyond that, and, perhaps, more important, pre-stress is useful in controlling flapping and fluttering of the fabric when it is subjected to wind forces. This flapping and fluttering can be deleterious to the integrity of the base fabric and/or to the bond between the base fabric and its coating. Also, dynamic effects resulting from slack fabric left to move wildly in the wind may cause unnecessarily high forces in the overall structural system; what is worse is that these potentially significant dynamic effects may not even be recognized. Fabric pre-stress allows the fabric to undergo a certain amount of unloading without going completely slack. It is in the fabrication and installation phases that the factors leading to the development of the correct pre-stress are established and accounted for in the design.

Good fabrication and installation must, foremost, reproduce in the construction project, the prescribed surface geometry at the prescribed pre-stress level as established by the designer. Up until the early 1970's, most fabric patterning was developed from hand calculations and/or physical models. While the reliance on hand calculations has greatly diminished, the use of physical models is still potentially quite important, although probably more for overall system evaluation and education of clients than for fabrication. Ideally, the fabricator will possess and employ fabric form-generating technology as well as have an intimate technical understanding of the stress versus strain properties of the fabric being used. Likewise, the installer will, ideally, employ methods in the construction process to monitor geometry of the structure as it evolves on the jobsite. As a specific example, the exact location of interface workpoints, that is, the points where the conventional construction (by other parties) ends and fabric-related construction begins, should be accurately checked before any fabric-related construction is started. Any mismatches here are likely to result in compromises of the behavior and/or looks of the fabric structure.

Fabric patterns should flow directly out of the equilibrium fabric surface shape as described by the three-dimensional coordinate geometry provided by the designer. In general terms, this means that the membrane finite elements, by which the designer has modeled the membrane/cable surface, need to be collected into a series of "strips". The breaking down of the surface description of the fabric into a series of "strips" allows patterns to be developed which can be transferred directly to a piece of fabric roll goods; from these patterns exact fabric panels can be cut and subsequently, joined together. The patterns may be developed, for example, from the three-dimensional "strips" by a "lay down" process which is described approximately as follows:

1. Take the structure shown in 3D in Figure 9.1 and in plan in Figure 9.2. The "strip" chosen here to serve as an example is heavily outlined on the figure.
2. Figure 9.3 shows this "strip" enlarged, isolated from the rest of the structure, and with nodes labeled. At this stage the "strip" is still described in three-dimensional terms and is not a pattern from which fabrication can be done.
3. Referring to Figure 9.3 since any three points define a plane, triangle 107-108-124 defines a plane, or a flat surface. For convenience let this plane represent a horizontal surface, such as a piece of fabric roll goods lying on a cutting table, a datum plane, as it were.
4. Line 107-124, which is part of triangle 107-108-124 and which lies in the datum plane, can be taken as a hinge, allowing node #108 to be lowered to the datum plane. At this stage, triangles 107-108-124 and 107-123-124 both lie in the datum plane.
5. Line 108-124, which is part of triangle 108-124-125 and which lies in the datum plane, can be taken as a hinge, allowing node #125 to be lowered to the datum plane. At this stage, triangles 107-108-124, 108-124-125, and 107-123-124 all lie in the datum plane.
6. Continue this process of laying down succeeding triangles within the "strip" until all triangles have been translated into the datum plane.
7. The resulting two-dimensional pattern is shown in Figure 9.4.

A fabric panel cut from this two-dimensional pattern, when joined to the other such "strips" which constitute the entire fabric structure surface as shown in Figure 9.2, will approximate the desired equilibrium shape of the tension structure. It should be emphasized, that, at best, the resulting fabric assembly is only an approximation of the original mathematical model of the structure. While individual fabric panels will lie flat on the floor or ground, the assemblage of panels will not.

The amount of fabric pre-stress is determined by the designer. Often, however, this decision is made with assistance from the fabricator and the material supplier. In general, the pre-stress level should be set no higher than the minimum amount necessary to stabilize the fabric, pull out wrinkles, and to keep the fabric from going slack when experiencing service loads. This pre-stress level will vary from structure to structure and from material to material; it will even often vary from material lot of the same fabric product. Common values of pre-stress range approximately 2kN/m to 10kN/m, depending on the fabric, the fabric shape, and the design loads.

The whole process of fabrication, from the cutting of individual fabric strips to the assembling of them, must be tightly controlled dimensionally. This is because the development of the proper pre-stress level in the finished structure is predicated upon very accurate sizing of the fabric assembly. If, for instance, individual fabric strips are accurately cut to a stretch-compensated fill width of 97% of the stretched width necessary to achieve the desired final shape at the desired pre-stress level, then, the assembly of these strips must also be accomplished with an accuracy which produces an overall dimension in the fill direction of 97% of the overall installed dimension of the structure. If not, then the whole effect of cutting the individual fabric strips carefully is wholly or partially lost, and the desired pre-stress level will not be achieved. The actual pre-stress level may end up being too high or too low. When basic fill compensations are less than the 3% used in this example, cutting and assembly tolerances may need to be all the tighter.

The foregoing description of patterning and compensation is, necessarily, simplistic. In practice, these phases of the fabrication process can be very complex and require the attention of highly qualified, thoughtful, and meticulous engineers and/or technicians. For example, in some cases the increased stiffness of the overall fabric surface due to the multiple layers of fabric at the welded seams needs to be taken into account.

In addition, other techniques than the one specifically described above, may achieve comparable results.

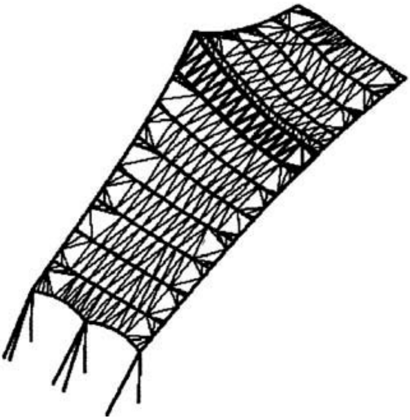

Figure 9-1
Sample Structure in Perspective

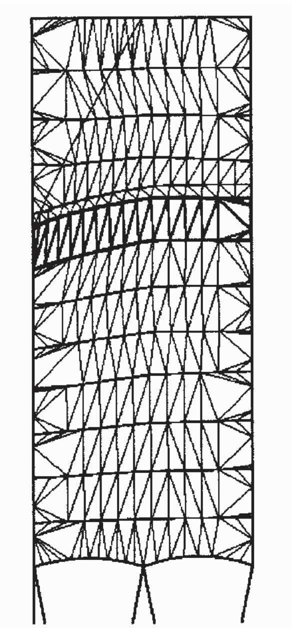

Figure 9-2
Sample Structure in Plan View

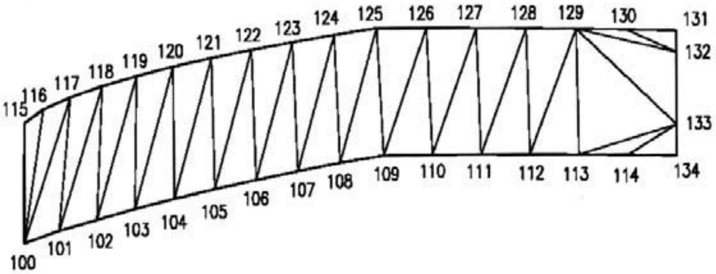

Figure 9-3
Sample Fabric Strip

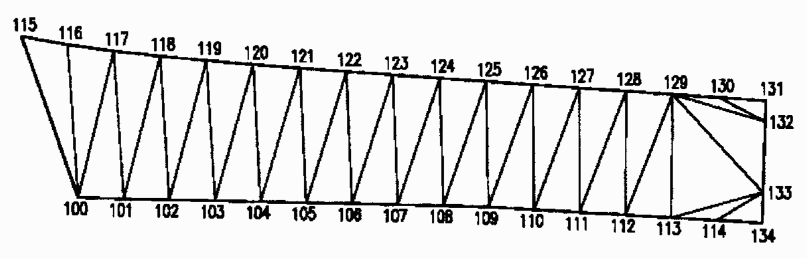

Figure 9-4
Fabric Pattern

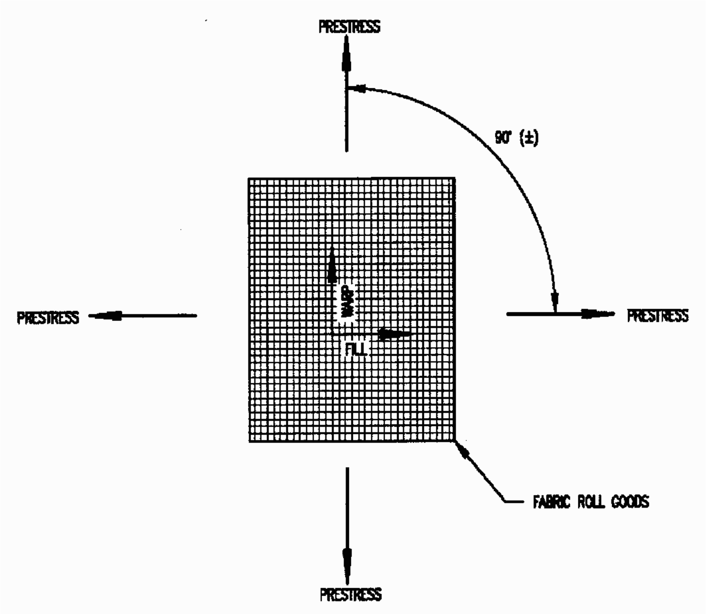

Figure 9-5
Biaxial Pre-Stress in Fabric

9.1.2 Non-Developable Surfaces

Tensile membrane surfaces are, generally, not planar or surfaces of revolution. As such their geometric description is relatively complex. Beyond that, the resulting geometric description, for patterning purposes, will be an approximation rather than strictly accurate. How precise the patterns must be depends upon the precision required for structural control and upon the precision required to achieve cosmetic objectives. The design engineer may play an important role in the evaluation of suitable patterning approaches to a project.

9.1.3 Efficiencies

If the density of fabric membrane elements used to describe the surface shape is too sparse, i.e. if there are not enough elements in the patterning model, local stress concentrations could develop and cause trouble in the unit in service or during construction. Also, the patterns could end up being wider than the roll goods from which the panels are to be cut, which is obviously unacceptable. If the density of the fabric membranes used to describe the surface shape is too dense, i.e. if there are too many elements in the patterning model, the result could be unnecessary fabric waste due to not taking full advantage of the width of the roll goods. Thus, the fabricator often will have to generate a more refined mesh of the desired surface shape in order to meet the practical needs of fabrication. Minimizing fabric waste is crucial to controlling the cost of fabrication.

9.1.4 Compensation

Once the fabricator has converted the surface geometry into two-dimensional fabric panels, attention must be turned to the stress versus strain properties of the particular fabric being used. Since the fabric must be stretched a certain amount during installation in order to develop the prescribed amount of pre-stress, it follows that the fabric panels must be cut and assembled smaller than their installed size. The amount smaller that the fabric panels must be cut and assembled is the amount of biaxial strain that each of the warp and fill directions of the fabric undergoes when biaxially loaded to the specified pre-stress level. This general process of making the fabric panels smaller than the finished, installed, size is known in the industry by the term “compensation”.

9.1.5 Variation in Fabric Stretch

One of the measures of fabric suitability for application in tensile membrane structures is variation in stretch. This variation can occur roll-to-roll as well as within a given roll.

The more uniform in stretch a particular fabric product is, the more predictable its fit and structural performance in an actual structure; thus, this uniformity is a very desirable quality in these applications.

Variation of stretch occurs generally due to one or more of the following:

1. Inconsistencies in the greige goods (the woven, un-coated fabric). This tendency may be exacerbated in wide fabric.

2. Across-the-roll variations in the coated goods due to across-the-roll zone variations in the coating process. This tendency may be exacerbated in wide fabric.

3. Down-the-length variations in the coated goods due to variations in the coating process; even effects due to stopping and starting the coating line, for instance, may result in variation problems.

Wide variations in stretch properties of tensile membrane fabric may have very significant effects on the biaxial stretch properties of the fabric. (See Figure 9.5).This can produce, for instance, under certain conditions fabric that has a tendency to shrink in one direction, under a tensile stress in that same direction. This may be counter-intuitive, nevertheless, it is an actual possibility. It can be a problem if not recognized and addressed.

9.1.6 Conformation with Structural Analysis

A tensile membrane shape that is not one upon which the structural analysis has been based cannot be construed as an engineered structure. Merely contriving a shape that is definable by specific geometry does not legitimize it as structural design. It is a requirement that a tensile membrane structure be shaped, analyzed, sized, patterned and installed based on one surface description that is common to all these operations.

9.1.7 Fabric-to-Center Ring Issues

An area of unique and recurring concern in the fabrication of tensile membranes is the treatment of fabric termination at mast rings. It is common to build a metal ring that can be raised or lowered on the masts of structures having cone-like surfaces.

It can be particularly difficult to manipulate the compensated fabric in such a way that it can be stretched onto the ring prior to tensioning the whole system in the installation process.

On the other hand, if the fabric assembly is de-compensated at the ring to facilitate attachment, one runs the risk of having the fabric too loose when the entire system is installed. It can be extremely helpful in addressing this area of concern to have the fabricated ring in the membrane fabrication shop at the time of membrane fabrication to work out the fit of the two elements.

9.1.8 Mock-Ups

Mocking-up involves building actual partial constructions of local parts of a design to closely examine fit. This is a practice that is a standard part of the manufacturing process for some of the most experienced and successful membrane fabricators.

Sometimes such a mock-up is produced at a reduced scale. It can be an indispensable aid to examining the fit of membrane terminations and connections because of the routinely complex geometry and interfacing of fabric, cable, hardware and support elements. The various components that make up a typical tensile membrane structural system are often fabricated by different suppliers and the coordination of the fit of these parts is best examined in the shop – before they go to the field for assembly.

9.1.9 Pre-Fittings

Because of the practical possibilities that hardware and fittings specified in the design are commonly substituted by the fabricator for those of other manufacturers, it is recommended that pre-fitting be practiced. This means that metal fabrications, cable terminations, fabric terminations, hardware, and fabric be collected in the shop and pre-checked for fit-up.

The shop drawings of metal fabrication and the cable-end fittings to be attached to them are often ill-coordinated or not produced at all. This can exacerbate the potential problems that this topic raises. Emphasis should be placed on the generation and review of shop drawings that, has commonly been neglected in this industry.

9.1.10 System Adjustability

A practical balance should be achieved between no-adjustability and a large amount of adjustability in the fabrication system. No-adjustability does not recognize the variability of fabric stretch, fabrication and construction tolerances, and variability in the level or uniformity of pretension achieved. Thus, the lack of means to adjust for these possible variations can hamper the ability of the installer to achieve the optimum finished result.

On the other hand, an excessive amount of adjustability on the system just raises the possibility that ignorant tweaking will result in an ugly and/or poorly performing structure.

9.2 Recent Advances in Fabrication Technology

9.2.1 Computer-Controlled Cutting Machines

Recent technological advances in the manufacture of tensile membrane structures include the move toward more extensive utilization of CAM in the form of computer-controlled fabric cutting machines. These take input from a pattern data file and directly use that file to mark and cut an individual fabric panel.

Manual layout of fabric panels tends to be extremely labor-intensive and subject to error. Thus, the computer-controlled cutting machine represents clear advantages over the manual method and probably represents the prevalent form of generating fabric panels in the future. Limiting reasons that would keep a manufacturer from immediately going to the CAM approach are the cost of purchasing equipment and the cost of upgrading technically-trained staff to work with computer-generated manufacturing data.

9.2.2 Wider Roll Goods

Since the publication of the first edition of this book, roll goods wider than the ordinary 60 inch wide rolls have become more generally available. These are often desirable because of the lower cost of fabrication due to a reduction in the amount of cutting, sealing, and other efficiencies that result.

In certain fabric types, Teflon-coated fiberglass, for instance, wide-width fabric has been available for many years. Most PVC-coated polyester fabrics have generally been manufactured in narrower roll widths, but now are sometimes available in anywhere from 70 inch to 108 inch widths.

The trend toward the use of wider width fabric will probably continue. However, it is worth noting that if the project involved is a small structure with severe surface curvature, the shape required may not allow wide un-sealed fabric panels without problems, both cosmetically and structurally. Wide un-sealed fabric panels are those that, for the purposes of this discussion, cannot adequately model the surface and the resulting stresses in the system. Wide un-sealed fabric panels in surfaces that have severe curvature may be cosmetically problematic because wrinkling is likely to occur. They may be structurally problematic in that the engineer is likely to lose capability to accurately model the stress distribution in the system and overlook potentially dangerous over-stresses (or under-stresses) in fabric/cables/connections. See Section 9.1.2.

9.2.3 Availability of Patterning Software

More computer programs are now available that produce fabric patterns. These represent a broad range of approaches. Some generate patterns that flow directly out of an equilibrium shape that has been used to perform the stress analysis that controls the structural design. Some others generate patterns that flow out of an equilibrium shape that has been contrived from a notion of a certain ratio of warp pre-stress to fill pre-stress – without, necessarily, any evidence of how such a shape would perform under superimposed design loads. In other words, the shape produced may look well – or not – but whether the structure behaves properly in service is unknown. Some others generate patterns that are based on ratios of warp-to-fill surface curvature; these are similar to the previous type in that they are not necessarily indicative of a defined structural response due to the application of design loads.

Any patterning software is suspect that does not generate patterns from an equilibrium shape that is the same shape that has been subjected to an analysis and giving evidence that it performs predictably and safely. Such a structure should not be portrayed as an engineered structure.

9.2.4 Expanded Use of Architectural Cables, Assemblies, and Fittings

When the first edition of this publication was produced, cable hardware/assemblies/fittings were primarily broadly available in 2 general categories: lightweight aircraft cable systems, that are fairly compact but still quite utilitarian, and the heavier industrial cable systems that are generally very bulky and strictly utilitarian.

Recently, systems have come into the market that are dedicated to architectural applications where the cable and its fittings are structural, but exposed so as to be appreciated visually as part of the design. These are potentially very elegant and when specified on a project call for increased attention to the detailing of the membrane where it terminates at these fittings.

These types of architectural cable assembles are rapidly becoming a mainstay of tensile membrane structural designs.

9.3 Installation

9.3.1 Packaging

When packing the fabric for shipping, due care should be taken for the design of the container and the method of folding the fabric so as to avoid damage. When unpacking the fabric at the jobsite and moving it from the container, the fabric should not be temporarily placed on the ground, roof, or any other available surface without first clearing the space of foreign objects and placing clean groundcloth or a layer of polyfilm, for example.

9.3.2 Handling

During the fabrication and shipping phases these fabrics normally are subject to harsh environments or harsh treatment which may be deleterious. Common sense dictates that certain precautions must be taken to reduce the potential for damage to the fabric during these stages.

During fabrication, when fabric must be moved around on the floor or layout area, care must be taken to assure that the fabric is not snagged or abraded in any way. Fabrication shall be done in an area which is dedicated for this purpose; the surface and equipment on which cutting and/or assembly takes place must be kept scrupulously clean, smooth, and free of unnecessary objects. While it is occasionally necessary to walk on the fabric during fabrication, it should generally be avoided. Certain kinds of fabrics are particularly vulnerable to damage done in this way. When it is necessary to walk on the fabric, soft-soled shoes should be worn and care shall be taken not to step or stand on folds. Fabric should not be allowed to come into contact with any fluids or chemical agents other than those identified by the fabric supplier to be safe for cleaning the fabric, and then only in the amounts prescribed and only for the purpose of required cleaning.

After the fabric has been removed from its packaging at the jobsite, it shall, at all times, thereafter be secured by tag lines or other such means. Fabric, being a very lightweight construction material, and often fabricated into assemblies of large size, becomes a sail in even moderate winds. The buffeting which results can in some cases cause damage to the fabric, fittings, cables, etc. More important, serious life safety risks are raised when un-tensioned fabric is caught in the wind.

9.3.3 Sequence of Pre-Tensioning

After the fabric system has been fabricated it must be installed. In many cases the installer will be the fabricator, in other cases, not. Current wisdom says that if the fabricator does not install the fabric system, then the installing contractor should at least be someone with whom the fabricator has had a satisfactory and continuing relationship. The proper installation of a tensioned fabric structure requires much care and planning. Many of the standard practices of conventional building construction are not valid for this type of project.

An installation plan should be generated early in the project. This may dictate that the plan be developed by the designer if no installer is on the project in its early phase. The plan shall give due attention to things such as:

1. How large an assembly can be reasonably managed at a time? In other words, does the fabric roof have to be broken up into several pieces in order to be installed?

2. Does the choice of direction of warp and fill of the fabric make the job of installation any easier or harder?

Obviously, the installation plan can affect the design of the fabric structure. Installation takes place in three general steps:

1. Layout

2. Fastening

3. Tensioning

In the layout phase the fabric and associated items are unpacked and placed loosely over the supporting structural elements, whether they be masts, arches, cables, or other elements. It is during this phase that the fabric system is most vulnerable to weather-related incidents. Fabric can be severely damaged at this time, or even lost, if caught in a windstorm. Workers themselves may be at risk if caught in high winds while, for instance, holding an unsecured edge of fabric, or while physically standing or sitting on the fabric at the time. It is generally recommended that the fabric not be installed in winds of more than 15 mph. Additionally, fabric installation, once begun, should not be left vulnerable to damage due to inclement weather. In this phase the fabric may be tied down with ropes and come-alongs but may not be fastened with the permanent hardware.

It is generally desirable to be able to loosely (i.e., without stretching) attach either the warp or the fill direction (usually the warp direction) of the fabric assembly to its boundaries. Once this is accomplished, then the fabric is reasonably under control in case inclement weather occurs. Then the system is pre-stressed by pulling only in the orthogonal direction. For example, suppose one is installing a fabric system over a system of parallel supporting arches. It is desirable to loosely pull the fabric to its boundaries at the ends of the structure (i.e., 90 degrees to the arch direction); in this case, this would normally mean fastening down the warp direction of the fabric. Once this has been accomplished, then the installer would go down each side of the fabric and stretch the fill direction of the fabric to its finished position.

In the case of a mast-supported “cone”-shaped tension structure, it is commonly desirable to be able to hang the fabric assembly from the top of the mast and attach the fabric loosely at its lower edges. Then the fabric is usually stretched circumferentially around the lower perimeter after which the mast top is raised to induce pre-stress into the body of the fabric.

In the fastening phase the fabric is anchored to its permanent attachment system. Cable end fittings are attached to the collector fittings, fabric is attached to clamp bars, and so on. Significant pulling forces may be developed during this phase as the fabric begins to stretch as it is pulled to its attachment locations. It cannot be over-emphasized that the permanent attachment locations must have been precisely placed or else the fabric will probably show evidence at this point of not fitting properly. Any such evidence should be addressed immediately because such mis-fits will probably become more of a problem as tensioning proceeds. It is important to realize that mis-fits are generally not merely cosmetic in this kind of system, even though cosmetic mis-fits, mostly in the form of wrinkles, are highly undesirable. Mis-fits owing to improper location of anchor points or to improper patterning of the fabric will likely produce the wrong pre-stress in the fabric after installation or produce an improper structural response in the system when subjected to external loads. When fabric goes slack, that portion of the membrane is no longer taking its share of the load, and may experience damage.

9.3.4 Measuring Achievement of Proper Pre-Tensioning

The fabric is actually stretched to its final boundaries during the tensioning phase. Pre-stress should be developed gradually, in stages, uniformly around the entire structure. Final tensioning should have the objectives of developing the desired stress field in the fabric as well as removing any wrinkles. This process should be in the responsible charge of the most knowledgeable fabric person on the jobsite. In the case of very large or complex structures, the structural engineer should assist in determining how or when the proper level of tensioning is achieved.

Non-destructive pre-stress measurement devices exist that can be placed onto the fabric as a local temporary ring support to measure the pre-stress. Otherwise, lengthening the cables or the fabric stretch itself may be indicators that the desired pre-stress has been achieved.

After installation, architectural/structural fabrics have shown themselves to be quite durable and essentially trouble-free. On rare occasions, structures may require minor re-tensioning due to creep of pre-tensioned fabrics. In practice, this is almost never required.

9.3.5 Other

All sharp edges which have the potential to rub or touch the fabric in any way that could result in fabric damage shall be rounded, padded, etc. so as to preclude this possibility.

The fabricator and the installer shall each have, in place, a quality assurance program which addresses the particular issues related to the building of a fabric structure.

The fabricator and the installer shall collaborate to provide an emergency repair kit to the structure’s owner. This repair kit shall contain not only the necessary supplies and special tools to perform the repairs, but also the necessary instructions on how and when to make repairs. This kit shall contain instructions on who to contact in case problems of a more serious nature should arise. This kit should advise the user of any safety issues related to the act of performing repair work on a fabric structure.

Bibliography

Air Structures Institute. (1977). "*Design and Standards Manuel ASI-77.*" Air Structures Institute.

American Iron and Steel Institute. (1979). "*Wire Rope User's Manual*."

American Society of Civil Engineers (ASCE). (1996). "*Air Supported Structures*." ASCE Standard 17-96, ASCE, Reston, VA.

American Society of Civil Engineers (ASCE). (1997). "*Structural Applications of Steel Cables for Buildings*." ASCE Standard 19-96, ASCE, Reston, VA.

American Society of Civil Engineers (ASCE). (2010). "*Tensile Membrane Structures*." ASCE Standard 55-10, ASCE, Reston, VA.

Barnes, M. R. (1976). "*Form Finding of Minimum Surface Membranes*." IASS World Congress on Space Enclosures, IASS, Madrid, Spain.

Barnes, M. R. and Wakefield, D. (1983). "*Dynamic Relaxation applied to Interactive Form Finding and Analysis of Air-Supported Structures*" The Design of Air Supported Structures, The Institution of Structural Engineers, Echo Press, London.

Berger, Horst. (1996). "*Light Structures – Structures of Light. The Art and Engineering of Tensile Architecture*." Birkhauser, Basle.

Bethlehem Steel. (1968). "*Cable Roof Structures*." Bethlehem, PA.

Bing, W. B. (2004). "*Free-Standing Tension Structures*." Spon Press, New York, NY.

Bradshaw, R. R., Campbell, D. M., Gargari, M., Mirmiran, A, and Tripeny, P. (2002). "*Special Structures: Past, Present, and Future*." Journal of Structural Engineering, American Society of Civil Engineers, Reston, VA.

Campbell, D. M. (1994). "*Effects of Spatial Triangulation on the Behavior of "Tensegrity" Domes.*" Spatial, Lattice and Tension Structures, IASS-ASCE International Symposium, American Society of Civil Engineers, Reston, VA.

Campbell, D. M. (1995). "*Tensioned Fabric Membrane Roofs for "Tensegrity" Domes.*" Proceedings, 1995 Structures Congress, American Society of Civil Engineers, Reston, VA.

Campbell, D. M. (1998). "*Design Experience with Nonlinear Tension Based Systems: Tents, Trusses and Tensegrity*", Proceedings, LSA98 Conference, LSAA, Sydney, Australia.

Campbell, D. M. (2003). "*Snow Induced Ponding of Textile Membrane Roof Structures.*" Designing Tensile Architecture, TensiNet Symposium, TesiNet, Brussels, Belgium.

Campbell, D. M. (2005). "*Design Experience with Post-Tensioned Spatial Steel Truss Networks.*" Proceedings, 2005 Structures Congress, American Society of Civil Engineers, Reston, VA.

Campbell, D. M. (2011). "*Challenges of Retrofitting an Existing Domed Stadium with a Retractable Roof- BC Place Stadium, Vancouver, BC.*" Proceedings, 2011 Structures Congress, American Society of Civil Engineers, Reston, VA.

Broughton, P. and Ndumbaro, P. (1994). "*The Analysis of Cable & Catenary Structures*." Thomas Telford House, London.

Committee on the Use of Tensioned Fabric Structures by Federal Agencies. (1985). "*Architectural Fabric Structures.*" National Academy Press, Washington, D.C.

Daugherty, H. B. (1999). "*The Technology of Final Tensioning Fabric Structures*." Structural Engineering in the 21st Century, Proceedings, 1999 Structures Congress, American Society of Civil Engineers, Reston, VA.

Day, A. S. (1978). "*A General Computer Technique for Form Finding for Tension Structures.*" IASS Conference on Shell and Spatial Structures – The Development of Form, IASS, Madrid, Spain.

Day, A. S. (1965). "*An Introduction to Dynamic Relaxation*." The Engineer, 218-221.

Day, A. S. and Bunce, J. W. (1970). "*Analysis of Cable Networks by Dynamic Relaxation*." Civil Engineering and Public Works Review, February, 383-386.

Drew, P. (1976). "*Frei Otto: Form and Structure.*" Westview, Boulder, CO.

Forster, B. and Mollaert, M. (2004). "*European Design Guide for Tensile Surface Structures.*" TensiNet, Brussels.

Forster, B. (1985). "*The Engineered Use of Coated Fabric in Long Span Roofs*." Journal of Coated Fabrics, vol. 15, July.

Forster, B. (1998). "*The Integration of Large Fabric Structure within Building Projects Including the Significance of Design Procurement Methods.*" IASSE/IEAust/LSAA International Congress, Sydney, Australia.

Geiger, D. H., et al. (1988). "*Design Details of an Elliptical Cable Dome and a Large-span Cable Dome Under Construction in the United States*." Proceedings, 1st Oleg Kerensky Memorial Conference, London, England.

Geiger, David. (1989). "*Encyclopedia of Architecture: Design, Engineering, & Construction, Volume 3.*" John Wiley & Sons, New York, 418-422.

Gilsanz, R. and Carlson, A. (1992). "*Shape Finder*." 1992 Structures Congress, American Society of Civil Engineers, Reston, VA, 125-128.

Gossen, P. A., et al. (2008). "*Snow Induced Ponding of Toyota Pavilion Canopy, Montage Mountain, PA*." Proceedings, 2008 Structures Congress, American Society of Civil Engineers, Reston, VA.

Haber, R. (1980). "*Computer-Aided Design of Cable Reinforced Membrane Structures*" PhD Thesis, Cornell University, Ithaca, NY.

Hamilton, K. P., et al. (1987). "*Comments on Limit States Behavior and Design of Large Deflection Tension Structures*." Proceedings, ASCE Conference Orlando, American Society of Civil Engineers, Reston, VA.

Hamilton, K. P., et al. (1994). "*Current State of Development and Future Trends in Employment of Air-Supported Roofs in Long-Span Applications*." Spatial, Lattice and Tension Structures, IASS-ASCE International Symposium, American Society of Civil Engineers, Reston, VA.

Herwig, O. (2003). "*Featherweights: Light, Mobile and Floating Architecture*." Munich.

Herzog, T. (1976). "*Pneumatic Structures.*" Oxford University Press, New York.

H. J. Schock. (2004). "*Segel Folien und Membranen: Innovative Konstruktionen in der Textilen Architektur.*" Basel.

Holgate, Alan. (1997). "*The Art of Structural Engineering.*" Axel Menges, Stuttgart, London.

Huntington, C. G. (1984). "*Visual Expressions of Fabric Tension Structures – The Possibilities and Limitations.*" Proceedings of the 1984 International Symposium on Architectural Fabric Structures, Architectural Fabric Structures Institute.

Huntington, C. G. (1987). "*Permanent Architectural Fabric Structures – Performance of the New Materials Technology*." Construction and Building Materials, Scientific and Technical Press Ltd, Surrey, England.

Huntington, C. G. (1992). "*Tensioned Fabric Structures.*" Construction India, 1992 Annual, Indian & Eastern Engineer.

Huntington, C. G. (1994). "*Fabric Roof Design Responds to New Technologies*." Spatial, Lattice and Tension Structures, Proceedings, IASS-ASCE International Symposium, American Society of Civil Engineers, Reston, VA.

Huntington, C. G. (1995). "*Within Limits.*" Fabrics & Architecture, January / February, 17-21.

Huntington, C. G. (1997). "*Fabric Structure Pretensioning Mechanisms*." Fabrics & Architecture, May/June.

Huntington, C. G. (2000). "*Tensioned Fabric Roof Connections and Detailing*." Fabric Architecture, January/February.

Huntington, C. G. (2004). "*The Tensioned Fabric Roof.*" American Society of Civil Engineers, Reston, VA.

Huntington, C. G. (2008). "*Structures Using Uncurved or Minimally Curved Tensioned Fabric Membranes*." Proceedings, ASCE Structures Congress, American Society of Civil Engineers, Reston, VA.

Huntington, C. G. (2009). "*Design of Connections for Tensioned Fabric Structures*." Proceedings, ASCE Structures Congress, American Society of Civil Engineers, Reston, VA.

Irvine, H. M. (1981). "*Cable Structures.*" The MIT Press, Cambridge, MA.

Ishii, Kazou, et al. (1999). "*Membrane Design and Structures in the World*." Kazuo Ishii, ed., Shinkenchiku-sha Co., Ltd., Tokyo.

Ishii, Kazou, et al. (1995). "*Membrane Structures in Japan.*" SPS Publishing Company, Tokyo.

Isenberg, C. (1992). "*The Science of Soap Films and Soap Bubbles.*" Dover Publications, Inc., Mineola, NY.

Japanese Standards Association. (1999a). "*Testing Methods for Woven Fabrics*." JIS L1096, JSA, Tokyo, Japan.

Japanese Standards Association. (1999b). "*Rubber Coated Fabrics*." JIS K6328, JSA, Tokyo, Japan.

Juracek, Judy. (2000). “*Interview with Nicholas Goldsmith Architect*.” Soft Surfaces: Visual Research for Artists, Architects, and Designers, W.W. Norton & Company, Inc.

Kasperski, M. (1992). "*Extreme Wind Load Distributions for Linear and Nonlinear Design*." Journal of Engineering Structures, Volume 14, Number 1.

Kasperski, M. and Niemann, H. J. (1992). “*The LRC (Load-Response-Correlation) Method: A General Method of Estimating Unfavourable Wind Load Distributions for Linear and Non-Linear Structural Behaviour*.” Journal of Wind Engineering and Industrial Aerodynamics, Elsevier Scientific Publishing Company.

Kind, R. J. (1982). “*Aeroelastic Modeling of Membrane Structures*.” Proceedings, The International Workshop on Wind Tunnel Modeling Criteria and Techniques in Civil Engineering Applications, Cambridge University Press, Gaithersburg, Maryland.

Kind, R. J. (1984). "*Pneumatic Stiffness and Damping in Air Supported Structures*." Journal of Wind Engineering and Industrial Aerodynamics, Elsevier Scientific Publishing Company, Volume 17.

Koch, K. M. and Habermann, K. J. (2004). “*Membrane Structures: The Fifth Building Material*.” Prestel, Munich.

Krishna, P. (1978). “*Cable-Suspended Roofs.”* McGraw-Hill Book Company, New York.

Kronenburg, Robert. (1997). “*FTL: Softness, Movement and Light*.” Academy Editions, West Sussex.

Kronenburg, Robert. (2003). “*Portable Architecture*.” Third Edition, Architectural Press.

Lambert, Kenneth. (1986). “*Performance Requirements for Architectural Membrane Fabrics*.” Proceedings of LSA 1986, Lightweight Structures Association of Australia.

l'Arca. (1993). No. 73, July/August.

Leonard, J. W. (1988). “*Tension Structures.”* McGraw Hill Book Company, New York.

Letchford, C. W., Row, A., Vitale, A., and Wolbers, J. (2000). “*Mean Wind Loads on Porous Canopy Roofs*.” Journal of Wind Engineering and Industrial Aerodynamics, Elsevier Scientific Publishing Company, Volume 84.

Levy, R. and Spillers, W. R. (1995). "*Analysis of Geometrically Nonlinear Structures*", Chapman & Hall.

Lewis, W. J. (2003). "*Tension Structures: Form & Behaviour*." Thomas Telford, London.

Liddell, Ian. (1989). "*The Engineering of Surface Stressed Structures*." Patterns 5, Buro Happold Consulting Engineers, Bath, England.

Mollaert, M. and Hebbelinck, S. (2002). "*The Design of Membrane and Lightweight Structures."* Haase, J., ed., TensiNet, VUB Brussels University Press, Brussels, Belgium.

Murrell, V. William. (1984). "*Tensile and Tear Strength Criteria for Architectural Fabric Structures*." Industrial Fabrics Association International, Roseville, Minn.

Nerdmeyr. W. (2005). "*Frei Otto, Complete Works: Lightweight Construction, Natural Design*." Basel.

Oberdick, Willard A., Boonyatikarn, Soontorn, and Wu Her-Fu. (1981). "*Energy Performance of Fabric Roof Structures*", Architectural Research Laboratory, College of Architecture & Urban Planning, Ann Arbor, Mich.

Otto, F., ed. (1973). "*Tensile Structures, Design, Structure, and Calculation of Buildings of Cables, Nets and Membranes*." The MIT Press, Cambridge, MA.

Pun, P. K. F. and Letchford, C. W. (1993). "*Analysis of a Tension Membrane Hypar Roof Subjected to Fluctuating Wind Loads*." Third Asia-Pacific Symposium on Wind Engineering, Hong Kong.

Robbin, Tony. (1996). "*Engineering a New Architecture*." Yale University Press, New Haven, Conn.

Roland, C. (1972). "*Frei Otto Structures."* London.

Rossnagel, W. E. (1964). "*Handbook of Rigging."* McGraw-Hill Book Company.

Scalzi, J. B., Podolny Jr., W., and Teng, W. C. (1969). "*Design Fundamentals of Cable Roof Structures."* United States Steel Corp, Pittsburgh, PA.

Schek, H. J. (1974). "*The Force Density Method for Form Finding and Computations of General Networks*." Computer Methods in Applied Mechanics and Engineering 3.

Scheuermann, Rudi, and Boxer, Keith. (1996). "*Tensile Architecture in the Urban Context."* Butterworth Architecture, Oxford.

Schlaich, J. and Bergermann, R. (2004). ”*Leicht Weit/Light Structures*.” Prestel, Munich.

Schock, H. J. (1997). “*Soft Shells.”* Birkhauser, Basel.

Schwitter, Craig. (1994). “*The Use of ETFE Foils in Lightweight Roof Construction*.” Proceedings, Spatial, Lattice, and Tension Structures, IASS-ASCE International Symposium, American Society of Civil Engineers, Reston, VA.

Seidel, M. (2009). “*Tensile Surface Structures – A Practical Guide to Cable and Membrane Construction.”* Ernst & Sohn, Berlin.

Shaeffer, R. E. (1996). “*Tensioned Fabric Structures: A Practical Introduction.”* American Society of Civil Engineers, Reston, VA.

Shaeffer, R. E. and Huntington, C. G. (1997). “*Tensioned Fabric Structures*.” Time Saver Standards for Architectural Design Data, McGraw Hill.

Standards Australia. (2002). "*AS/NZS 1170.2:2002, Wind Loadings*", Standards Australia, Sydney, Australia.

Tensinet. (2003). “*Designing Tensile Architecture.”* Vrije Universiteit Brussel, Brussels.

Tensinet. (2007). “*Ephemeral Architecture - Time and Textiles.”* Libereria CLUP, Milan.

The Institute of Structural Engineers. (1984). “*The Design of Air-Supported Structures.”* The Institution of Structural Engineers, Echo Press, London.

Vandenberg, Maritz. (1996). “*Soft Canopies - Detail in Building*.” Academy Editions, London.

Vickery, B. J. (1986). *"Gust Factors for Internal Pressures in Low Rise Buildings."* Journal of Wind Engineering and Industrial Aerodynamics, Elsevier Scientific Publishing Company.

Vickery, B. J., Georgiou, P. N., and Draisey, S. (1988). “*The Influence of Wall Venting on the Wind Induced Response of Large Span Lightweight Roofs*.” Internal Paper, University of Western Ontario.

Wakefield, David. (1999). “*Engineering Analysis of Tension Structures: Theory and Practice*.” Engineering Structures, 21.

Appendix 1

Glossary of Terms

Anticlastic:	A surface with positive (Gaussian) curvature in one principal direction and negative (Gaussian) curvature in the other. A saddle shaped surface.
Base fabric:	The uncoated fabric of a coated or composite fabric material, also known as greige goods.
Bias:	Direction 45 degrees to the warp and fill directions of a fabric.
Biaxial:	Condition considered in two concurrent orthogonal directions, usually the principal directions.
Boss plate:	Doughnut-shaped plate attached to a cable ear plate to reinforce it at the pin hole.
Cable cuff:	Edge treatment in which fabric is folded over on itself to form a sleeve in which a catenary cable can be installed.
Cable fitting:	Device attached to the end of a cable to allow a connection to another member. Fittings are typically swaged or speltered on the cable.
Cable net:	Surface structure composed of discrete cables connected at crossing points.
Catenary:	The curve theoretically formed by a perfectly flexible, uniformly dense, inextensible "cable" suspended from each of two end points. In tensile membrane structures, this curve is generally not ever truly developed, but the term is commonly used to describe the shape developed at the edge or boundary of a tensioned membrane attached to a cable which is restrained only at its end points.
Catenary edge:	Method of securing the boundary of a tensioned membrane panel with a cable tensioned between two fixed points.

Clevis:	A ‘U’-shaped or forked end fitting fastened with a pin or bolt used with a cable stud end or a threaded rod to form a pinned connection that is somewhat adjustable.
Cloth:	See base fabric.
Coating:	A material applied to a fabric for waterproofing and protection of the fabric yarns.
Coating adhesion:	Strength of the bond between the substrate of a fabric and the coating.
Compensation:	The operation of shop fabricating a fabric structure or pieces of the structure smaller in the unstressed condition than the actual installed size, to account for the stretch at prestress level.
Creep:	An increase in strain in a material with time when subjected to a constant stress.
Crimp:	The extent of deformation normal to the plane of the fabric that the fill and warp yarns undergo as they are woven together.
Cushion:	Multiple layer pneumatic structure, typically used as the structural system of ETFE films.
Daylighting:	Natural sunlight provided within a space due to the translucency of building envelope.
Developable:	A characteristic of a surface that can be formed using a single flat sheet of material, e.g., a singly curved surface such as a cone or cylinder.
Detension:	Relieve the tension or stress in a membrane.

Elongation:	The change in lengths of a material sample: normally this is associated with some load or force acting on the sample. In fabric, this elongation does not normally refer to true strain of the fiber elements as in the classical sense; but, rather, normally refers to the "apparent" strain resulting from a straightening out of the crimped yarns in the fabric matrix.
Equilibrium shape:	The configuration that a tensioned fabric surface assumes when boundary conditions, prestress level, and prestress distribution are defined.
ETFE Film:	Transparent membrane material consisting of ethylene-tetrafluoroethylene film.
Fabric:	A woven or laid cloth of yarns.
Fabric clamp:	Device for clamping the edge of a fabric panel, usually a bar or channel shape and made of aluminum steel.
Fiber:	The basic thread of the material from which the yarns and fabrics are made.
Fill yarns:	See weft yarns.
Flutter:	Excessive, uncontrolled wind induced movement of a surface. This can occur when a tension membrane lacks sufficient prestress or curvature.
Foil:	Term generally applied to isotropic structural membranes such as ETFE film. Strict use of the term applies only to metallic membranes.
Force Density:	The ratio of the force in a linear element divided by its current length.
Form Finding (Form Generation)	The process of determining the equilibrium shape of a fabric structure.

Gaussian Curvature:	The product of the principal curvatures at a defined point in a surface.
Greige goods:	See Base fabric.
Hysteresis:	The failure of fabric to return to its original geometry after the strain-inducing force has been removed.
Lap Seam:	Seam created when the two pieces joined are overlapped by the width of the seam.
Light transmission:	A measure of the portion of light striking a fabric surface that passes through the fabric and into the space to provide daylighting.
Liner:	A secondary interior membrane, usually non-structural.
Membrane:	A surface structure with no bending resistance and therefore capable of resisting only in-plane tensile forces.
Minimal Surface:	Minimal surfaces are defined as having zero mean curvature. Typically used to refer to a stable surface having the minimum area for a given boundary.
Modulus of Elasticity	The ratio of the change in stress to the change in strain. Usually defined as a force per unit width of a membrane material. (This is not identical to the definition of modulus of elasticity as given for traditional structural materials.)
Non-developable:	A characteristic of a surface that cannot be formed using a single flat sheet of material, e.g., a doubly curved surface such as a sphere or a saddle-shape.
Orthotropic:	Refers to anisotropic materials with the axes of anisotropy oriented normal to one another. Most woven textiles exhibit orthotropic anisotropy.

Panel:	A prefabricated area of membrane fitted with boundary attachment mechanisms to field-assemble multiple panels on site.
Patterning:	The process of defining two-dimensional pieces of fabric which can be spliced together to form a desired three-dimensional shape.
Pneumatic Structure:	Membrane structures in which the surface is prestressed and stabilized by air pressure.
Poisson's ratio:	The ratio of lateral strain to longitudinal strain; may take a wide range of values due to the deformation characteristics of a woven material. (This is not identical to the definition of Poisson's ratio as given for traditional structural materials.)
Ponding:	A progressive failure initiated by local accumulation of snow, rain, or combined loading resulting in changes to the surface geometry that prevent drainage of the accumulated material.
Prestress:	The state of stress in a membrane structure in the absence of all applied loads; usually the result of strain energy intentionally stored in the system through jacking or tensioning during installation.
PTFE/Glass Fabric:	Woven glass fabric coated with polytetrafluoroethylene (PTFE, also known by the trade name Teflon). Also referred to as PTFE coated fiberglass.
PVC/Polyester:	Woven polyester fabric coated with polyvinylchloride (PVC). Often provided with an additional topping.
Radius of Curvature	The instantaneous magnitude of (Gaussian) curvature at a location on a membrane surface. The magnitude is typically considered in two principal directions. The orientation of the principal directions and their magnitudes may vary continuously over the surface.
Reinforcement:	An additional layer of membrane placed in an area of high stress to protect the main membrane.

Reflectance:	A measure of the portion of light striking a fabric surface that rebounds from the surface without being absorbed or transmitted.
Roll goods:	Raw fabric or film used in the fabrication of panels for tensioned membrane structures.
Rope edge:	Edge treatment in which the edge of a membrane is folded over on itself and a rope, cord, or rod that is incorporated in the fold to anchor the membrane in a mechanical joint.
Scalloped Edge:	Refers to an edge detail of membrane construction wherein surface membrane terminates into a flexible edge cable stretched between fixed points.
Seam:	Linear connection between individual strips of membrane. Usually made by welding, but sewed or glued in some membrane materials.
Sectionalizing:	The manner in which a membrane form is separated into separate prefabricated panels that are field assembled, usually with mechanical joints.
Silicone/Glass:	Woven glass fabric coated with silicone.
Sound reflectivity:	A measure of the portion of sound striking a fabric surface that rebounds from the surface without being absorbed or transmitted. Sound reflectivity may be variable across the frequency range.
Sound transmission:	A measure of the portion of sound striking a fabric surface that passes through it.

Spelter:	Type of cable fitting in which the wires of the cable are opened inside a cone shaped chamber in the fitting and either molten metals such as zinc, or zinc-aluminum, or a resin is poured into the fitting to secure the fitting to the cable.
Swage:	Type of cable fitting in which a sleeve fits over the outside of the cable and the sleeve is compressed around the cable to form a tight fit.
Synclastic:	A surface with positive (Gaussian) curvature in both principal direction. A bubble shaped surface.
Thimble:	Device used in a simple cable loop end to secure the cable and bear against the pin. Thimbles are usually used with shackles.
Topping/Top Coat:	An additional coating or finish sometimes used in composite membranes to achieve desired properties, often for greater protection against UV degradation or for ease of cleaning.
Translucency:	See light transmission.
Turnbuckle:	Threaded device used with cables or rods to allow length adjustment.
Ultraviolet (UV) Degradation:	The deterioration of a material under long-term exposure to the ultra-violet spectrum of sunlight.
Uniaxial:	Along one direction, usually a principal direction.
Warp yarn:	The long straight yarns in the long direction of a piece of fabric.
Weaving:	The process of making a fabric from yarns passing alternately over and under each other.
Weft yarn:	The shorter yarns of a fabric which usually are woven at right angles to the warp yarns. Also called the fill yarns.

Weldment:	A welded connection component, usually steel, for the attachment of cables and/or membrane. It may be free-floating or connected to other rigid structure.
Wicking:	the conveying of liquid by capillary action along and through the yarns of the base fabric.
Wrinkles:	Furrows or ridges on the normally smooth surface of a fabric structure, which are indicative of extreme differences between the principal stresses typically resulting from a lower stress perpendicular to the furrow.
Yarn:	A number of fibers grouped together to make a thicker strand for weaving. They may be twisted together or parallel to each other.

INDEX

Page numbers followed by *e*, *f*, and *t* indicate equations, figures, and tables, respectively.

Index Terms	**Links**		
A			
acoustics	131–132	131*f*	
aesthetics	132–134	133*f*	134*f*
air structures	3–6		
radomes	4*f*		
Silverdome	5–6		
U.S. Pavilion, Osaka World Fair	5*f*		
Arabian Tower Hotel	17*f*		
aramids	37	38*f*	
architectural art	23–24	24*f*	
architectural fabrics	41–49		
fire resistance	42–43		
lifespan	43		
stretch and dimensional stability	47–48		
sustainability	49–50		
tensile strength	44–47	45*f*	46*f*
	47*f*		
translucency	43		
workability	48–49	49*f*	
Arizona State University	21*f*		

Index Terms **Links**

B

big tops 3
black tent 2 2*f*

C

cable domes 14–15
Georgia Dome 15*f*
schematic 14*f*
cable nets 6–7 7*f*
cables
clamping 108*f*
cuff 108*f*
eye termination 112*f*
fabric termination at cable 108
mechanisms 122 122*f* 123*f*
saddles 115–116 116*f*
swaged and speltered cable hardware 113*f*
termination design 114–115 115*f*
termination hardware 111–113
wear strip at cable 110*f*
Chene Park Amphitheater 11*f*
coatings 39–40
polyethylene 40
PVC 39
silicone 40 40*f*
Teflon 39
Commerzbank Arena 22*f*

Index Terms	Links		
concept development	26–27		
cone-like			
forms	58–59	58*f*	63*f*
models	63*f*		
connections	104–125		
cable clamping	108*f*		
cable cuff	108*f*		
cable eye termination	112*f*		
cable mechanisms	122	122*f*	123*f*
cable saddles	115–116	116*f*	
cable termination design	114–115	115*f*	
cable termination hardware	111–113		
direct	120	120*f*	121*f*
fabric support at rigid element	110–111		
fabric termination at cable	108		
fabric termination at corner	109–110		
fabric termination at rigid edge	107	107*f*	
fabric to fabric	105–106		
field splice	106*f*	107*f*	
lap seam	106*f*		
mast base details	118–119	118*f*	119*f*
mast mechanisms	123–124	124*f*	125*f*
mast top details	116–117	117*f*	
membrane plate fabric termination	109*f*		
overview	104–105		
pipe arch with fabric	110*f*		
pipe with fixed fabric	111*f*		
pretensioning mechanisms	119–120		
swaged and speltered cable hardware	113*f*		

Index Terms	**Links**		
connections (*Cont.*)			
turnbuckles	113*f*		
wear strip at cable	110*f*		
construction studies	66	66*f*	
contract documents	27–30		
Cynthia Woods Amphitheater	11*f*		
D			
dead loads	52		
Denver Airport	13*f*		
design and construction team	25–26		
detail studies	64	65*f*	
drainage	101		
E			
earthquake loads	55		
Eden Project	18*f*		
energy use	129–131	129*f*	131*t*
envalet	2	3*f*	
erection. *See* fabrication and erection			
ETFE foils	40–41	41*f*	
expanded PTFE	36–37	37*f*	
F			
fabric characteristics	32–35		
mesh and solid fabrics	33*f*		
plain weave cross section	34*f*		

Index Terms	Links		
fabrication and construction			
compensation	143		
conformation with structural analysis	144		
efficiencies	143		
fabric stretch variation	143–144		
fabric-to-center ring issues	144		
installation	147–150		
mock-ups	144–145		
non-developable surfaces	142–143		
patterning	138–140	140*f*	141*f*
	142*f*		
pre-fittings	145		
recent advances in	145–147		
system adjustability	145		
fabrication and erection	31		
fibers	35–39		
aramids	37	38*f*	
expanded PTFE	36–37	37*f*	
glass	36		
interior fabrics	38–39		
polyester	35	36*f*	
polyethylene	38	38*f*	
films	40–41	41*f*	
form determination	56–93		
computer analysis	69–70		
dynamic relaxation	83–93	85*f*	88*f*
	89*f*		
equilibrium considerations	57	57*f*	

Index Terms	**Links**		
form determination (*Cont.*)			
force density	77–83	79*f*	
forms	58–60		
geometric classification	56		
linear stiffness analysis	70–74	71*f*	
models	60–66		
non-linear stiffness analysis	74–77		
preliminary analysis	66–69	68*f*	
tensile behavior	56		
forms			
cone-like	58–59	58*f*	63*f*
hybrid	60		
ridge-and-valley	60		
saddle	59	60*f*	62*f*
Foshan Stadium	22*f*		

G

Georgia Dome	15*f*	
glass	36	

H

Haj Terminal	9*f*	
Hampton Roads Convention Center	19*f*	
hybrid forms	60	

I

inspection and maintenance	31	135–136

Index Terms	**Links**		
interior fabrics	38–39		
K			
Kaleidoscope Shopping Center	16*f*		
kibitka	1	1*f*	
Kufstein castle	22*f*		
L			
lighting	129–131	129*f*	131*t*
liners. *See* interior fabrics			
live loads	52		
load analysis	94–103		
analysis techniques	101		
cables	102–103		
codes and standards	94		
design parameters	99–100		
diminishing slope	101		
drainage	101		
fabric	102		
flat regions	100		
foundations	103		
live loads	52		
low slopes	100		
membrane flutter	96–97		
non-linear response	94–96	94*f*	95*f*
	96*f*		

load analysis (*Cont.*)
  ponding 97 100
  snow and ponding 97
  snow loads 96 97–99 98*f*
  supports 103
  system components 102
  wind loads 96
  wind performance 96–97
loads 51–55
  dead 52
  earthquake 55
  live 52
  overview 51–52
  rain 55
  snow 54–55 55*f* 97–99 98*f*
  wind 52–54

M

maintenance. *See* inspection and maintenance
mast-supported structures 8*f*
membrane flutter 96–97
models
  cone-like 63*f*
  construction studies 66 66*f*
  detail studies 64 65*f*
  saddle 62*f*

Index Terms **Links**

models (*Cont.*)
  soap 61–63 62*f*
  stretchy fabric 64 64*f*
  wire mesh 64
Mosley Music Pavilion 12*f*
movable and retractable roofs 21–23
  Commerzbank Arena 22*f*
  Foshan Stadium 22*f*
  Kufstein castle 22*f*

N

National Aquatics Center 20*f*

P

Palacio de Mineriain Mexico City 19*f*
patterning 30 138–140 140*f* 141*f* 142*f*
Pier Six Concert Pavilion 13*f*
polyester 35 36*f*
polyethylene 38 38*f* 40
ponding 97 100
preliminary design 27
PVC 39

R

radomes 4*f*
rain loads 55

Index Terms **Links**

ridge-and-valley forms 60
Riyadh Stadium 10*f*

S

saddle
  forms 59 60*f* 62*f*
  models 62*f*
Seoul World Cup Stadium 17*f*
silicone 40 40*f*
Silverdome 5–6
snow loads 54–55 55*f* 97–99 98*f*
soap models 61–63 62*f*
Spring Preserve Visitors Center 20*f*
stadiums
  Foshan Stadium 22*f*
  Riyadh Stadium 10*f*
  Seoul World Cup Stadium 17*f*
stretchy fabric models 64 64*f*

T

teepee 1–2
Teflon 39
tensile behavior 56
tensile strength 44–47 45*f* 46*f* 47*f*

Index Terms	**Links**		
tensioned fabric structure applications	126–137		
acoustics	131–132	131*f*	
aesthetics	132–134	133*f*	134*f*
attached membranes	127–128		
cost issues	136		
durability	135–136		
energy use	129–131	129*f*	131*t*
fire safety	128–129		
inspection and maintenance	135–136		
internal membranes	128		
lighting	129–131	129*f*	131*t*
material choices	136		
materials and labor availability	134		
membrane covers	126–127		
scale	136		
structural efficiency	136–137		
tensioned fabric structures	7–14	15–21	
Arabian Tower Hotel	17*f*		
Arizona State University	21*f*		
Chene Park Amphitheater	11*f*		
Cynthia Woods Amphitheater	11*f*		
Denver Airport	13*f*		
Eden Project	18*f*		
Haj Terminal	9*f*		
Hampton Roads Convention Center	19*f*		
Kaleidoscope Shopping Center	16*f*		
mast-supported	8*f*		
Mosley Music Paviliion	12*f*		

Index Terms	Links		
tensioned fabric structures (*Cont.*)			
National Aquatics Center	20*f*		
Palacio de Mineriain Mexico City	19*f*		
Pier Six Concert Pavilion	13*f*		
Riyadh Stadium	10*f*		
Seoul World Cup Stadium	17*f*		
Spring Preserve Visitors Center	20*f*		
tensioning			
cable mechanisms	122	122*f*	123*f*
direct	120	120*f*	121*f*
mast mechanisms	123–124	124*f*	125*f*
pretensioning mechanisms	119–120		
tents			
big tops	3		
black tent	2	2*f*	
envalet	2	3*f*	
forms	1–3		
kibitka	1	1*f*	
teepee	1–2		
yurt	1		

U

U.S. Pavilion, Osaka World Fair	5*f*		

W

wind loads	52–54		
wind performance	96–97		

wind tunnel studies 159–163 160*f*
wire mesh models 64

Y

yurt 1